PIONEER®
The Art of Entertainment

Service Manual

ORDER NO.
CRT1335

MULTI-CD/TUNER CONTROL DSP DECK

KEX-M900

US, ES

- **See the service manual CX-156 (CRT-468) when servicing the cassette mechanism assy.**
- **Dolby and the double-D symbol are trademarks of Dolby Laboratories Licensing Corporation.**
- **Noise Reduction System manufactured under license from Dolby Laboratories Licensing Corporation.**

CONTENTS

1. CONNECTING THE UNITS ····· 3
2. PARTS IDENTIFICATION ····· 3
3. PARTS IDENTIFICATION (DISPLAY) ····· 6
4. DISASSEMBLY ····· 8
5. CIRCUIT DESCRIPTION ····· 11
6. ADJUSTMENT ····· 16
7. CONNECTION DIAGRAM (1) ····· 42
8. SCHEMATIC CIRCUIT DIAGRAM (1) ····· 45
9. SCHEMATIC CIRCUIT DIAGRAM (2) ····· 48
10. CONNECTION DIAGRAM (2) ····· 51
11. SCHEMATIC CIRCUIT DIAGRAM (3) ····· 53
12. CONNECTION DIAGRAM (3) ····· 55
13. SCHEMATIC CIRCUIT DIAGRAM (4) ····· 57
14. CONNECTION DIAGRAM (4) ····· 59
15. SCHEMATIC CIRCUIT DIAGRAM (5) ····· 60
16. CONNECTION DIAGRAM (5) ····· 61
17. CHASSIS EXPLODED VIEW ····· 62
18. CASSETTE MECHANISM ASSY EXPLODED VIEW · 66
19. PACKING METHOD ····· 70
20. ELECTRICAL PARTS LIST ····· 71

PIONEER ELECTRONIC CORPORATION 4-1, Meguro 1-Chome, Meguro-ku, Tokyo 153, Japan
PIONEER ELECTRONICS SERVICE INC. P.O. Box 1760, Long Beach, California 90801 U.S.A.
PIONEER ELECTRONICS OF CANADA, INC. 505 Cochrane Drive, Markham, Ontario L3R 8E3 Canada
PIONEER ELECTRONIC [EUROPE] N.V. Keetberglaan 1, 2740 Beveren, Belgium
PIONEER ELECTRONICS AUSTRALIA PTY. LTD. 178-184 Boundary Road, Braeside, Victoria 3195, Australia TEL: [03] 580-9911

© PIONEER ELECTRONIC CORPORATION 1990

FS DEC. 1990 Printed in Japan

SAFETY INFORMATION

CAUTION

This service manual is intended for qualified service technicians; it is not meant for the casual do-it-yourselfer. Qualified technicians have the necessary test equipment and tools, and have been trained to properly and safely repair complex products such as those covered by this manual.
Improperly performed repairs can adversely affect the safety and reliability of the product and may void the warranty. If you are not qualified to perform the repair of this product properly and safely, you should not risk trying to do so and refer the repair to a qualified service technician.

WARNING

Lead in solder used in this product is listed by the California Health and Welfare agency as a known reproductive toxicant which may cause birth defects or other reproductive harm (California Health & Safety Code, Section 25249.5). When servicing or handling circuit boards and other components which contain lead in solder, avoid unprotected skin contact with the solder. Also, when soldering do not inhale any smoke or fumes produced.

SPECIFICATIONS

General

Power source ..... 14.4 V DC (10.8–15.6 V allowable)
Grounding system ..... Negative type
Dimensions (chassis) ..... 178(W) x 50(H) x 150(D) mm
[7(W) x 2(H) x 5-7/8(D)]
(nose) ..... 178(W) x 49(H) x 18(D) mm
[7(W) x 1-7/8(H) x 3/4(D)]
Weight ..... 1.8 kg (4.0 lbs.)
Tone controls (parametric)
(Bass) Frequeency ..... 63, 100, 160, 250 Hz
±12 dB
(Treble) Frequency ..... 4, 6.3, 10, 16 kHz
±12 dB
Equalizer
(3 band parametric EQ)

Frequency	20 Hz,	25 Hz,	31.5 Hz
	40 Hz,	50 Hz,	63 Hz
	80 Hz,	100 Hz,	125 Hz
	160 Hz,	200 Hz,	250 Hz
	315 Hz,	400 Hz,	500 Hz
	630 Hz,	800 Hz,	1 kHz
	1.25 kHz,	1.6 kHz,	2 kHz
	2.5 kHz,	3.15 kHz,	4 kHz
	5 kHz,	6.3 kHz,	8 kHz
	10 kHz,	12.5 kHz,	16 kHz
	20 kHz		

Equalization range ..... ±12 dB
(7 band EQ)

Frequency	60 Hz,	125 kHz,	250 kHz
	500 Hz,	1 kHz,	3.5 kHz
	10 kHz		

Equalization range ..... ±12 dB
Loudness contour ..... +10 dB (100 Hz), +7 dB (10 kHz)
(volume: −30 dB)
Preout output level ..... 500 mV
Output impedance ..... 1 kΩ

Tape player

Tape ..... Compact cassette tape (C-30–C-90)
Tape speed ..... 4.76cm/sec. (+0.14cm/sec. − 0.05cm/sec.)
Fast forward/rewind time ..... Approx. 100 sec. for C-60
Wow & flutter ..... 0.06% (WRMS)
Frequency response ..... Metal: 25–22,000 Hz (±3 dB)
Stereo separation ..... 50 dB
Signal-to-noise ratio
..... Metal: Dolby C NR IN: 73 dB (IHF-A network)
Dolby B NR IN: 67 dB (IHF-A network)
Dolby NR OUT: 61 dB (IHF-A network)

1. CONNECTING THE UNITS

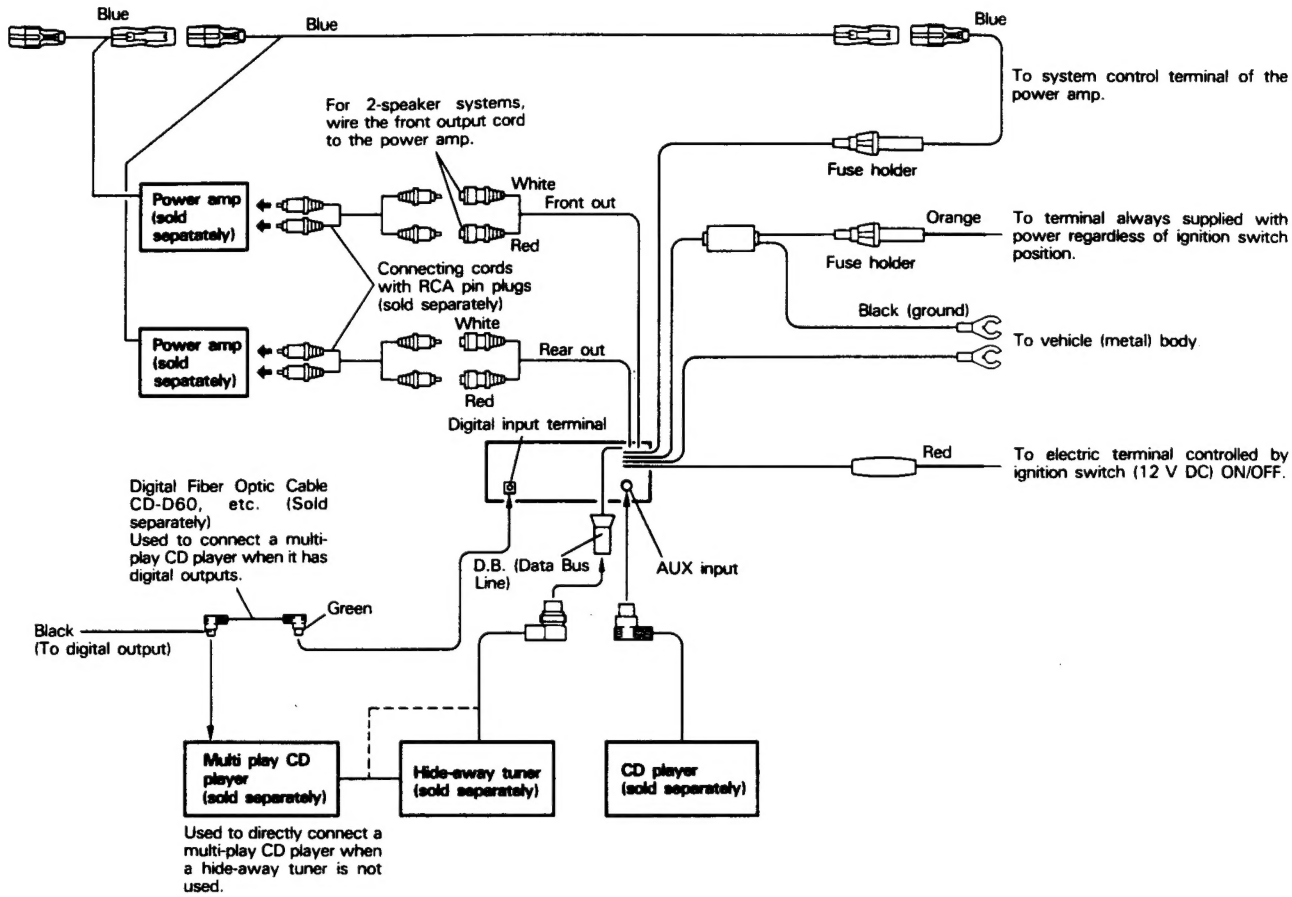

2. PARTS IDENTIFICATION

Common Parts 1

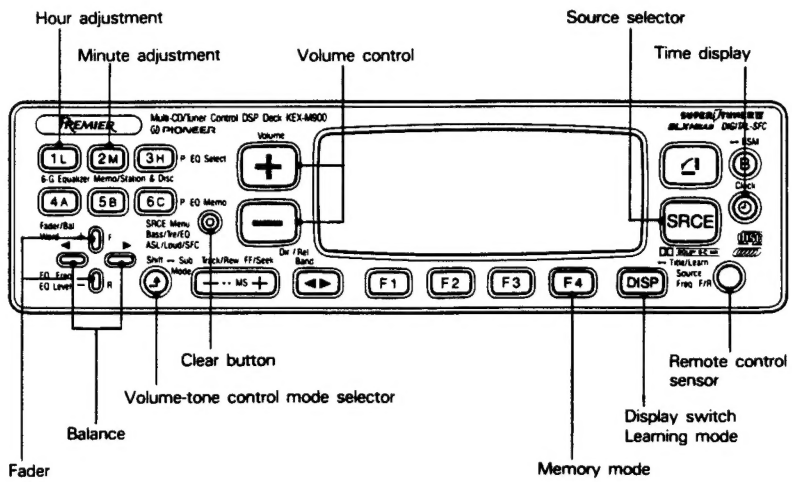

Common Parts 2

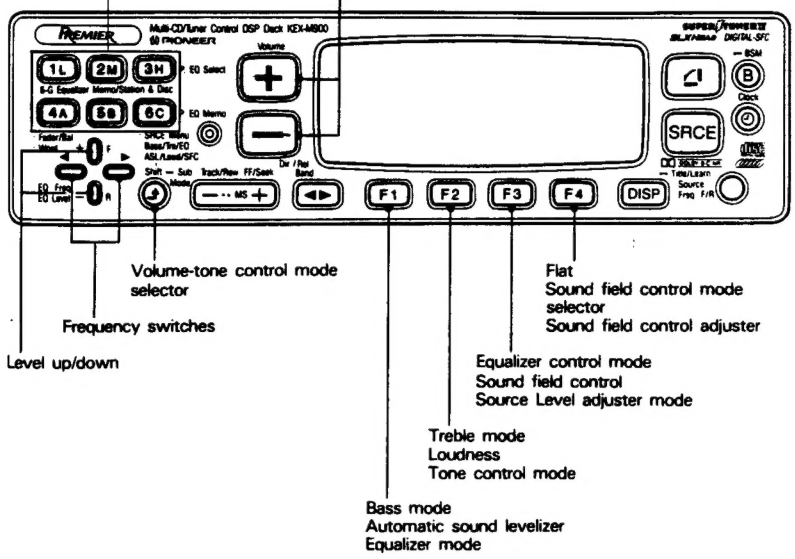

Tape Deck

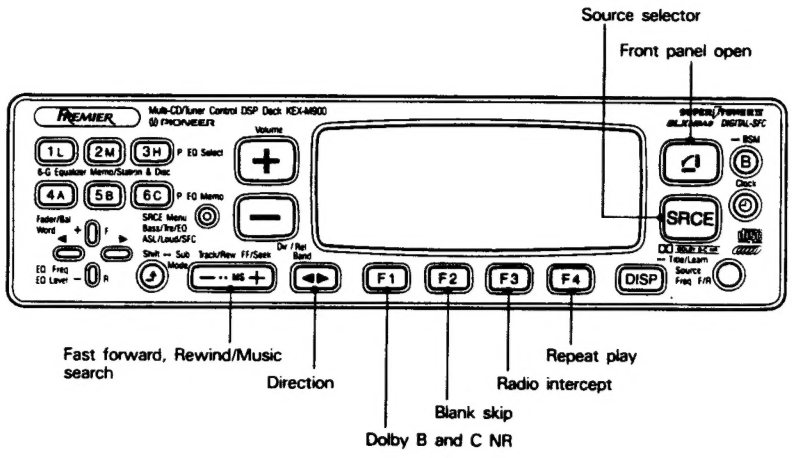

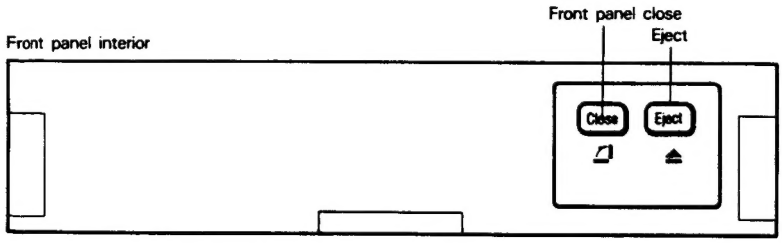

Multi-Play CD Player

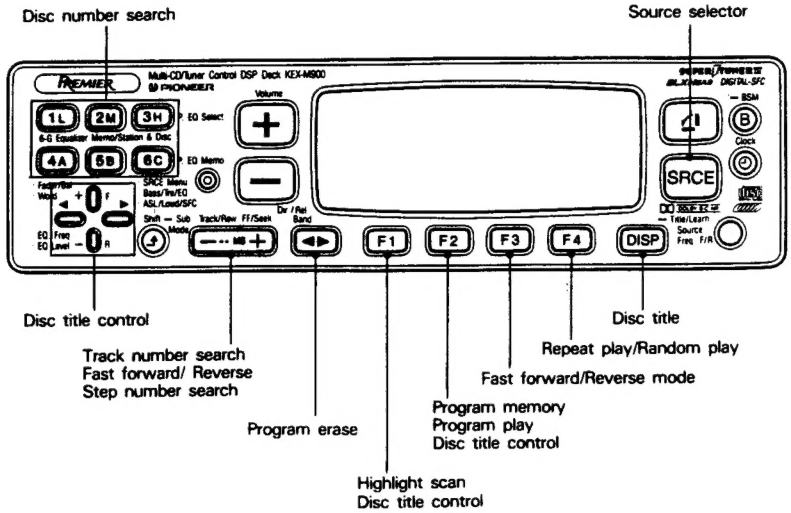

- The multi-play CD playback function requires connection to the separately available multi-play CD player.

Tuner

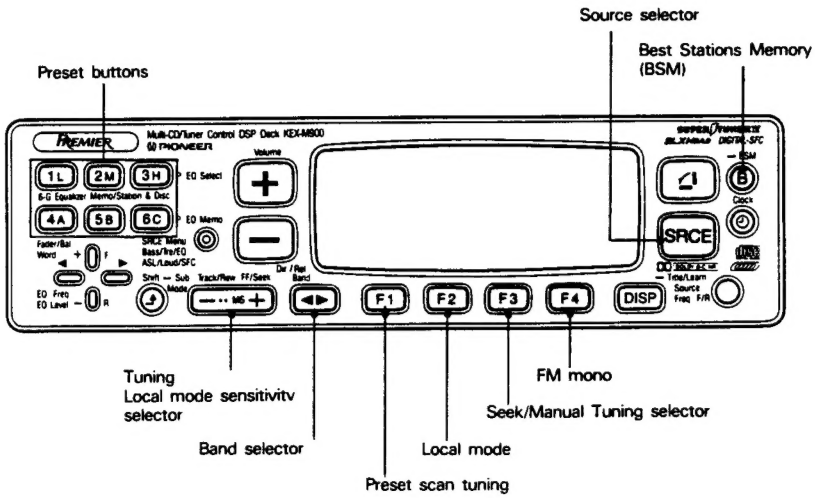

- The radio tuning function requires connection to the separately available FM/AM hide-away tuner.

3. PARTS IDENTIFICATION (DISPLAY)

Common Parts (Volume-tone Control Mode 1)

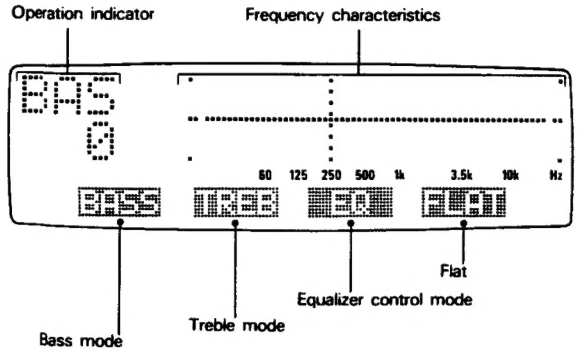

Common Parts (Volume-tone Control Mode 3)

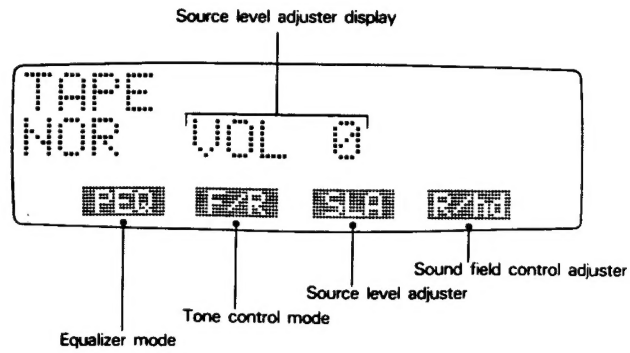

Common Parts (Volume-tone Control Mode 2)

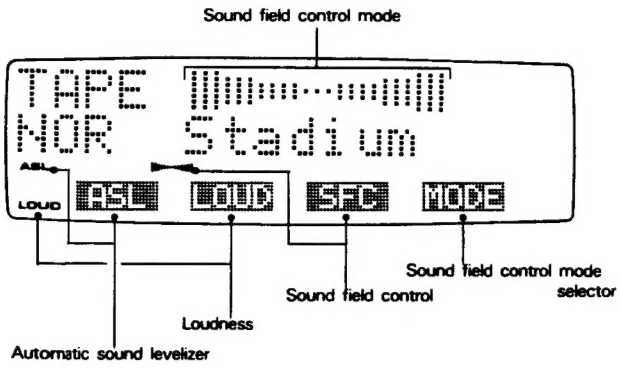

Tape Deck

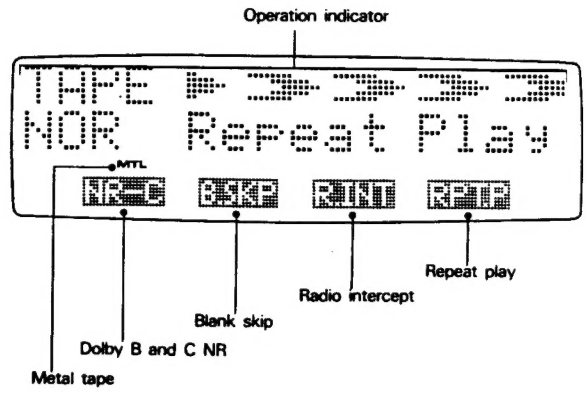

Multi-Play CD Player

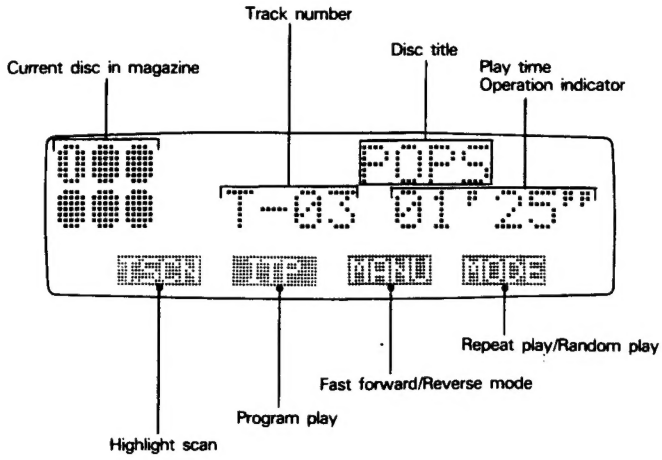

- The multi-play CD playback function requires connection to the separately available multi-play CD player.

Tuner

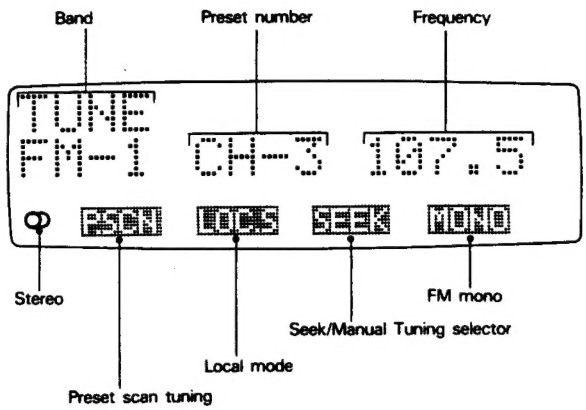

- Radio reception requires connection to the separately available FM/AM hide-away tuner.

4. DISASSEMBLY

● Case

1. Remove the four screws and then remove the case.

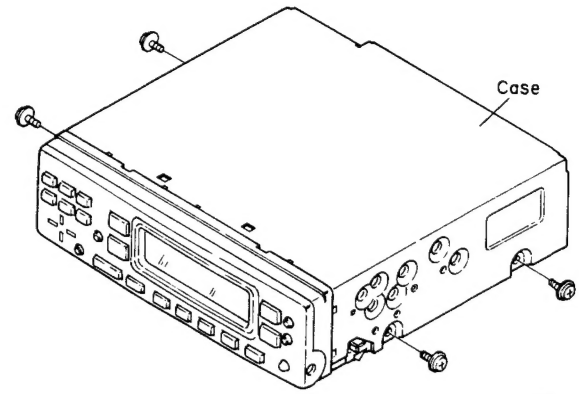

Fig. 1

● Cassette Mechanism Assy

1. Remove the four screws.
2. Disconnect the P.C. board unit connector.
3. Remove the cassette mechanism assy.

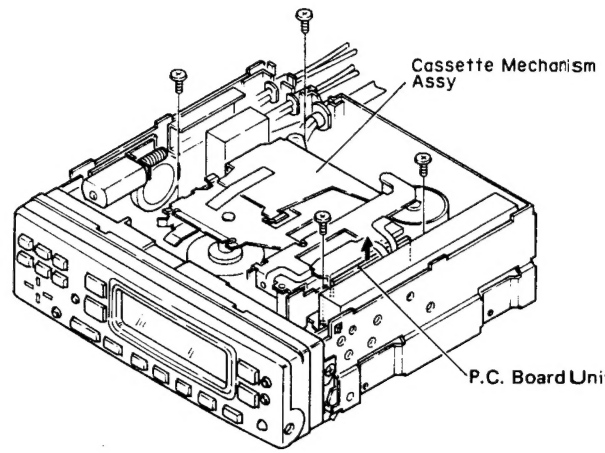

Fig. 2

● Grille Assy

1. Open the front panel.
2. While holding down the lock button, pull the grille assy. toward you.

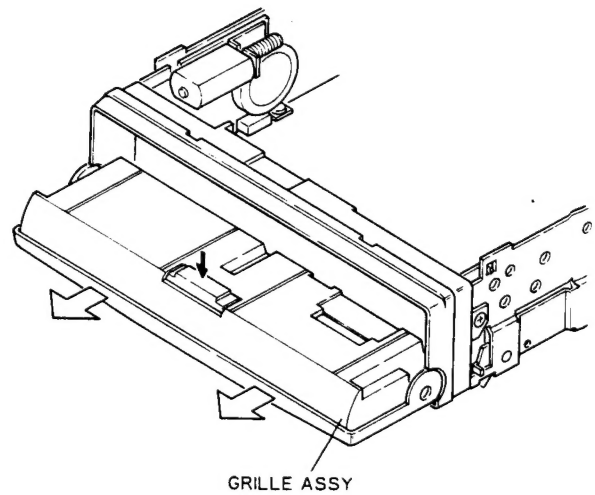

Fig. 3

● Panel Assy

1. Remove the three screws.
2. Disconnect the five connectors.
3. Press the tabs at four locations indicated by arrows, and then remove the panel assy.

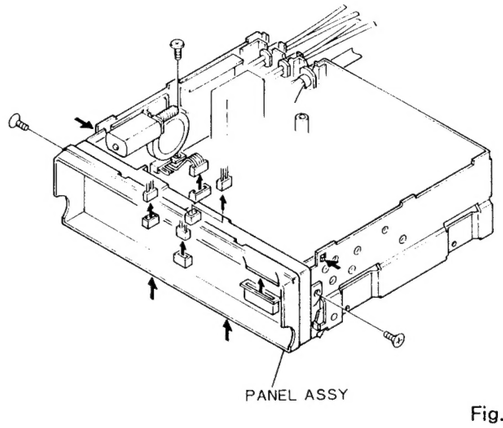

Fig. 4

● Chassis Unit

1. Remove the three screws.
2. Unbend the tabs indicated by arrow until straight.
3. Remove the chassis unit.

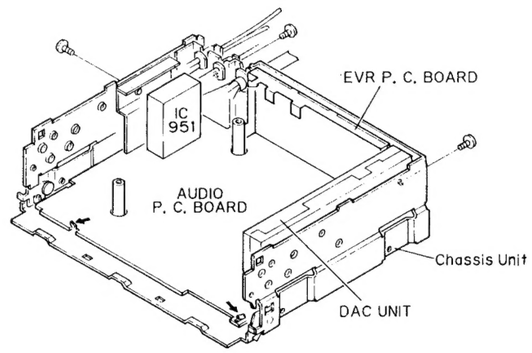

Fig. 5

● Control P.C. Board

1. Remove the three screws A, and then remove the cover unit.
2. Remove the three screws B, holder, and then disconnect the two connectors.
3. Remove the control P.C. board.

● LCD Unit

1. Remove the five screws C, and then remove the LCD unit.

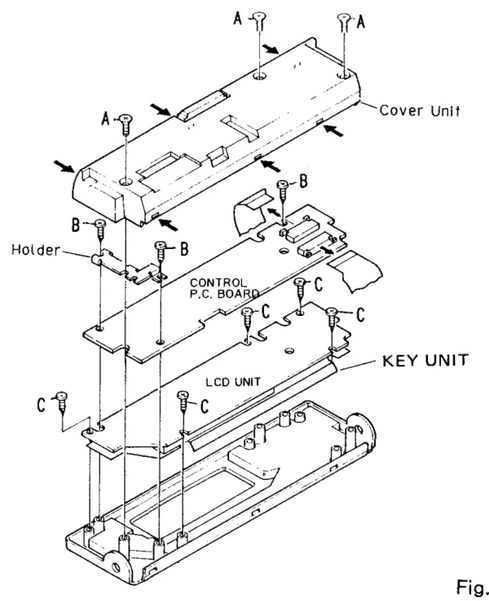

Fig. 6

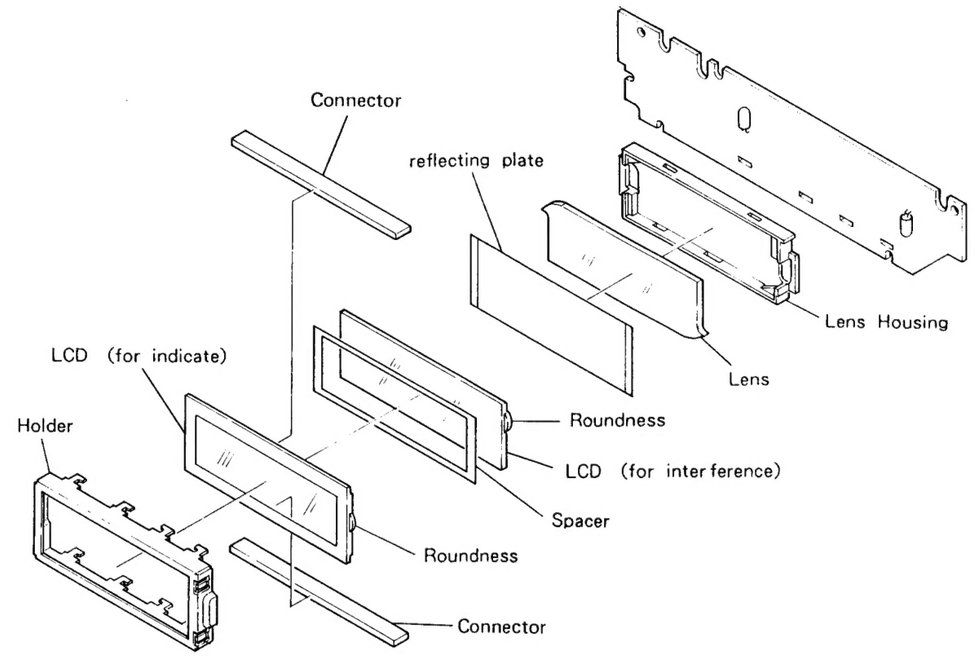

Fig. 7

● Notes for Assembling the LCD Unit

This unit is equipped with two LCDs (one for display and the other for interference).

When assembling the LCD unit, align the LCDs as shown in the figure. Place the LCDs on top of each other so the interference LCD becomes dark (try reversing the LCD).

Matching the board and the LCDs

1. When disassembling the LCD unit, make sure to replace the connector with a new one.
2. Match the LCDs and the board with the power turned on.
   Press the LCDs and the board against each other, and confirm that there is no faulty contact, and then bend the holder claw and solder it.

In case of faulty contact

1. Reverse the connector.
2. Exchange the two connector against each other.

5. CIRCUIT DESCRIPTION

● Block Diagram

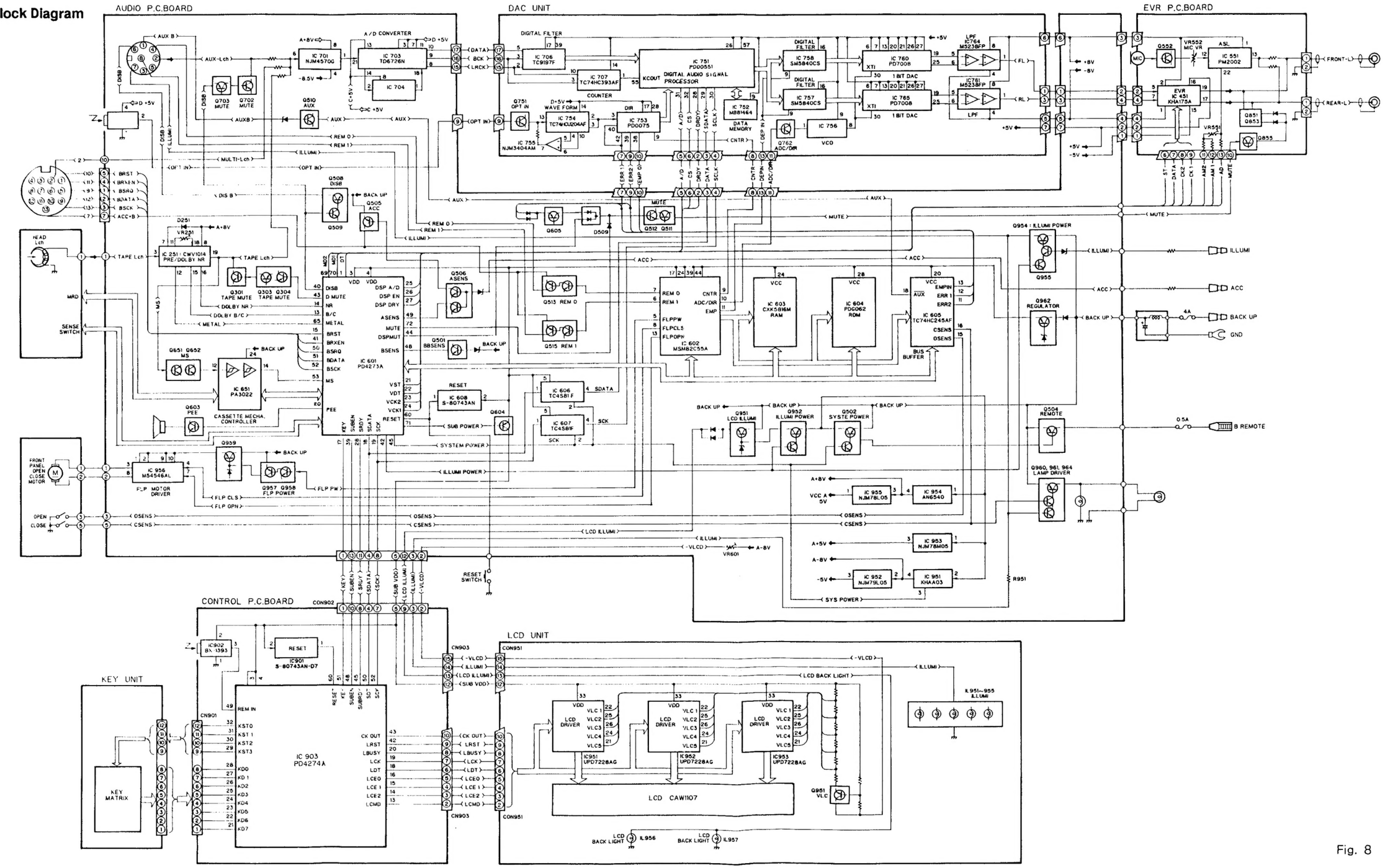

Fig. 8

● LCD Driver

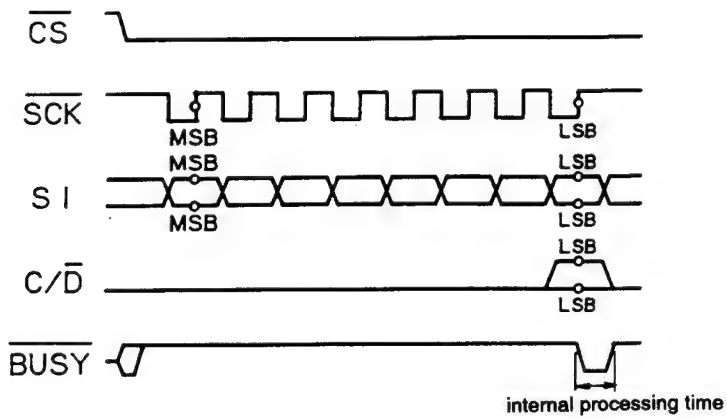

$\overline{CS}$ (LCE0~2) : Chip select
$\overline{SCK}$ (LCK) : Serial clock
SI (LDATA) : Serial data
C/$\overline{D}$ (LCMD) : Command/$\overline{Data}$
$\overline{BUSY}$ ($\overline{LBUSY}$) : BUSY
CKOUT : System clock for driver

Fig. 9 Serial input timing

After turning on the IC903 (PD4274) key microprocessor, CS is set to 'L' and LCMD to 'H' (command assignment) to send initial data such as frame frequency etc. to IC951-953 (UPD7228G). Then, the command data and clock pulse are sent.

After the data is received, UPD7228G $\overline{LBUSY}$ is set to 'L' and internal processing is performed. Then, it changes back to 'H' so RDY condition is set.

Next, when sending the display data, LCMD is set to 'L' (data assignment) and the same processing as above is performed.

KEX-M900 uses three LCD drivers (UPD7228G). The driver for communication is selected by LCE0 to 2 to perform the operation described above.

However, if after reception of data $\overline{BUSY}$ is not set to 'L' for some reason, a communication error occurs and LRSET is output to restart from initialisation.

● DSP (Digital Signal Processor)

For communication between IC601 (PD4273) and IC751 (PD00551, DSP), CK and DATA are shared with the key micro processor IC903. Therefore, $\overline{DSPEN}$ (CS) becomes 'L' to enable communication of DSP DATA and CK. Then, CK sets RDY to 'L' (BUSY state), after which the data is received, and DSPEN and DSPRDY rise to 'H' to complete the transmission.

In case RDY does not become 'H' after data reception, an abnormality is determined and DSPRESET is applied.

If RDY remains 'L' even DSPRESET is applied repeatedly, DSPMUTE is applied. Data is sent in the form of 8 bits several times according to control specifications.

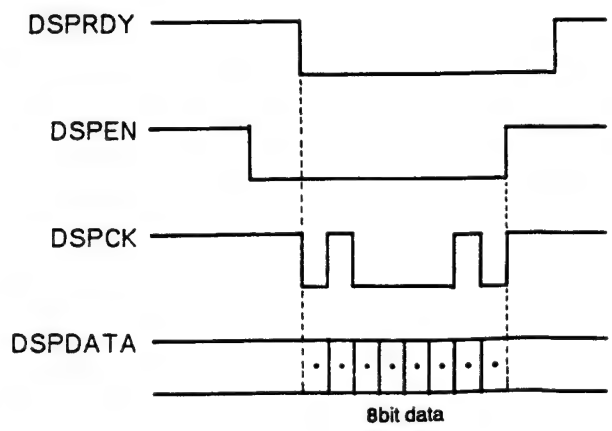

Fig. 10

● Electronic Volume

This unit is equipped with two ICs (front and rear) inside IC451 (EVR). CK is divided into two branches (CK1, CK2), with common VDT and VST.

VCK1 and VDATA for E-VOL (front) are output and latched inside E-VOL. Next, VCK2 and VDATA for E-VOL (for rear) are output and latched inside E-VOL in the same manner as above, then VST is output to operate front and rear E-VOL simultaneously.

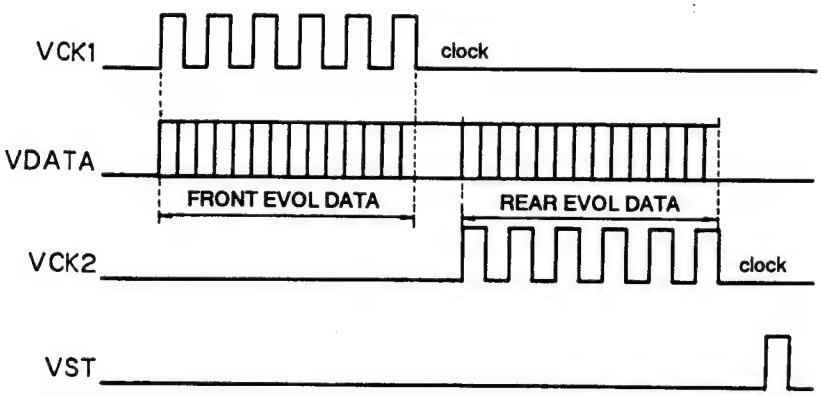

Fig. 11

● Digital Audio Signal Flow (Fig. 12)

① To improve the performance of the LPF in the previous stage and the S/N ratio, sampling is performed with 2fs.

② The data sampled with 2fs is reconverted to fs.

③ Necessary informations such as LRCK, BCK and DATA etc. are sampled by IC753 (PD0075) from the digital input format (CP340).

④ AD and OPT data from 2 and 3 is written in and read out from the DRAM (MB81464) each time and processed for delay etc. by the DSP.

To achieve a S/N ratio similar to a 16 bit DAC system, the 1 bit DAC system performs 8 times over-sampling of the input at ⑤ , after which noise shaping is performed in PD7008 at the next stage, whereby noise is pushed out of the audio range and the S/N ratio is improved. Finally, the data is PWM processed and output.

After passing the 3rd stage LPF ⑥ the audio signal is obtained.

Digital Audio Signal Flow

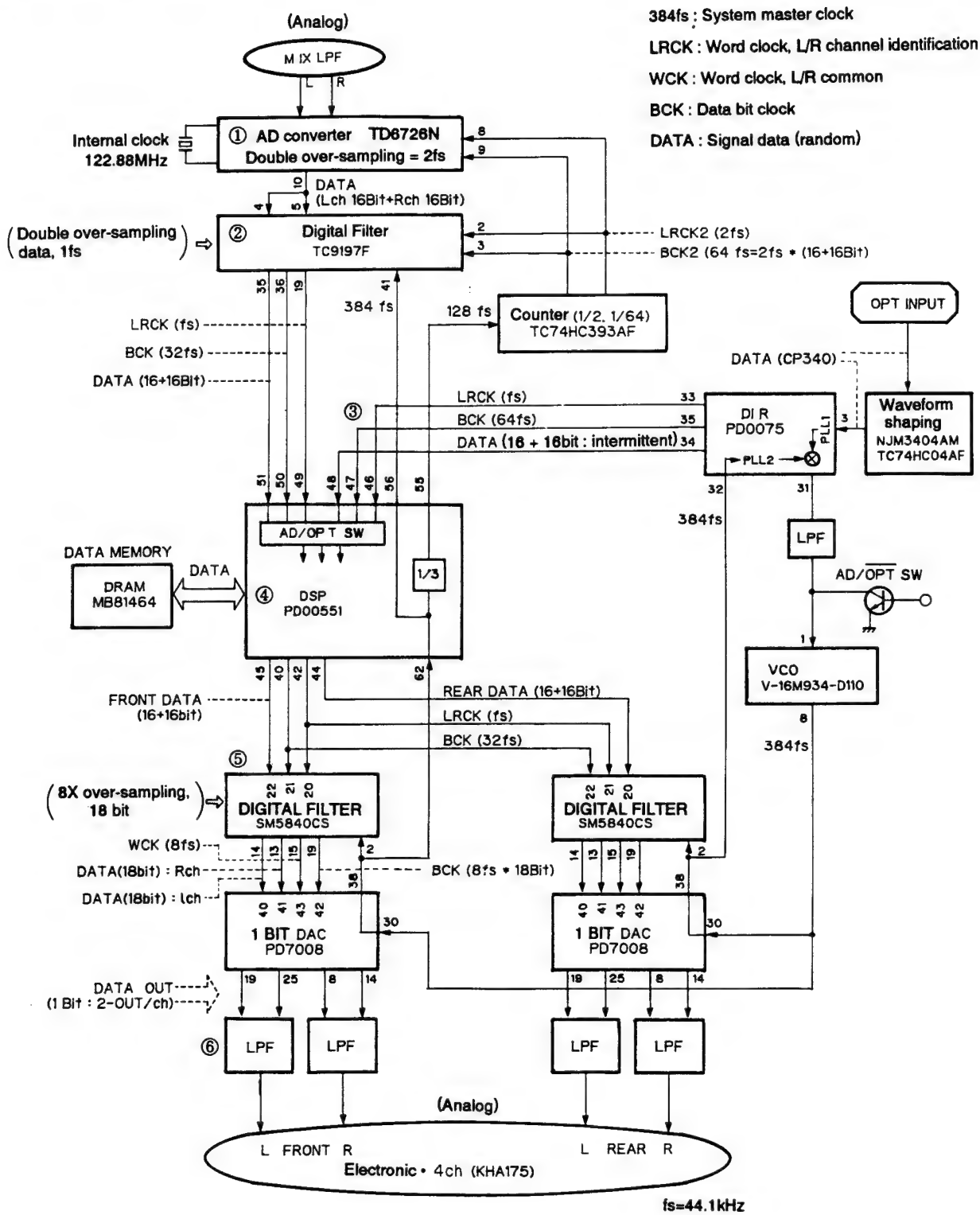

Fig. 12

6. ADJUSTMENT

TEST MODE

Test mode is mainly used in adjustment of CD multi-players (such as CDX-M50).

- Switching to test mode

  While pressing the F1, VOL − kyes together, switch the back-up ON or release the clear button.

- Canceling test mode

  Press the CD multi-player clear button, and then the KEX-M900 clear button. Or, switch the CD multi-player and KEX-M900 back-up OFF.

- Key functions during test mode

  The CD multi-player, deck, and tuner are selected by the SRCE key.

a)CD multi-player

Key	Function
BAND/REL	Regulator ON/OFF
FWD	FWD kick
REV	REV kick
F1	Tracking close
F4	Tracking open
F2	Focus close
F3	Carriage/tracking switching

b)DECK, TUNER

No corresponding function. Normal operation executed.

DOLBY NR ADJUSTMENT

No.	Cassette Tape	Adjusting Point	Adjustment Method (Switch Position)
1	NCT-150 (400Hz, 200nwb/m)	VR251 (Lch) VR252 (Rch)	mV Meter : − 6dBs (+1.5dB, − 0.5dB) (DOLBY NR Switch : OFF)

CLOCK ADJUSTMENT

No.	Adjusting Point	Adjustment Method
1		Connect Pin 30 (DB6) and Pin 34 (DB3) of IC601 to Pin 64 (KST0).
2		Back-up ON or press the clear button.
3	TC601	Frequency Counter : 1048576Hz ± 2Hz

A/D CONVERTER ADJUSTMENT

No.	Adjusting Point	Adjustment Method
1		Input the DC zero signal (ground the input) as analog signal.
2	VR706 (Lch) VR705 (Rch)	Adjust so that the lower side of the output waveform of Pin 19 (Lch) and Pin 27 (Rch) of IC703 becomes -0.7V.
3	VR701 (Lch) VR702 (Rch)	DC V Meter (1), (2) : Approx. -2V
4	VR703 (Lch) VR704 (Rch)	Set the volume to step 29, and input the 1kHz signal from the oscillator. Adjust so that the waveform clipping is symmetrical for upper and lower part.
5	VR701 (Lch) VR702 (Rch)	Reduce the signal output level so that the waveform does not clip, and adjust so that the distortion ratio becomes minimum.
6		Repeat No. 4 and No. 5 and adjust so that the waveform clipping is symmetrical for the upper and lower part, and the distortion ratio becomes minimum.

*LCD ADJUSTMENT

No.	Adjusting Point	Adjustment Method
1		Select the disc title input mode.
2		Observe the part where black and white is inverted from the front.
3	VR601	Adjust so that dots are not flickering. 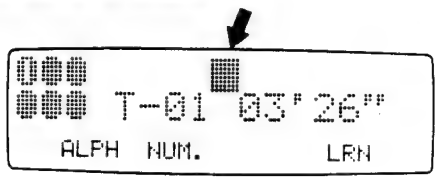

* The grille assembly and the main unit are adjusted to match prior to shipping, so make sure to readjust when the grille assembly and the main unit combination is changed.

• Flow Chart

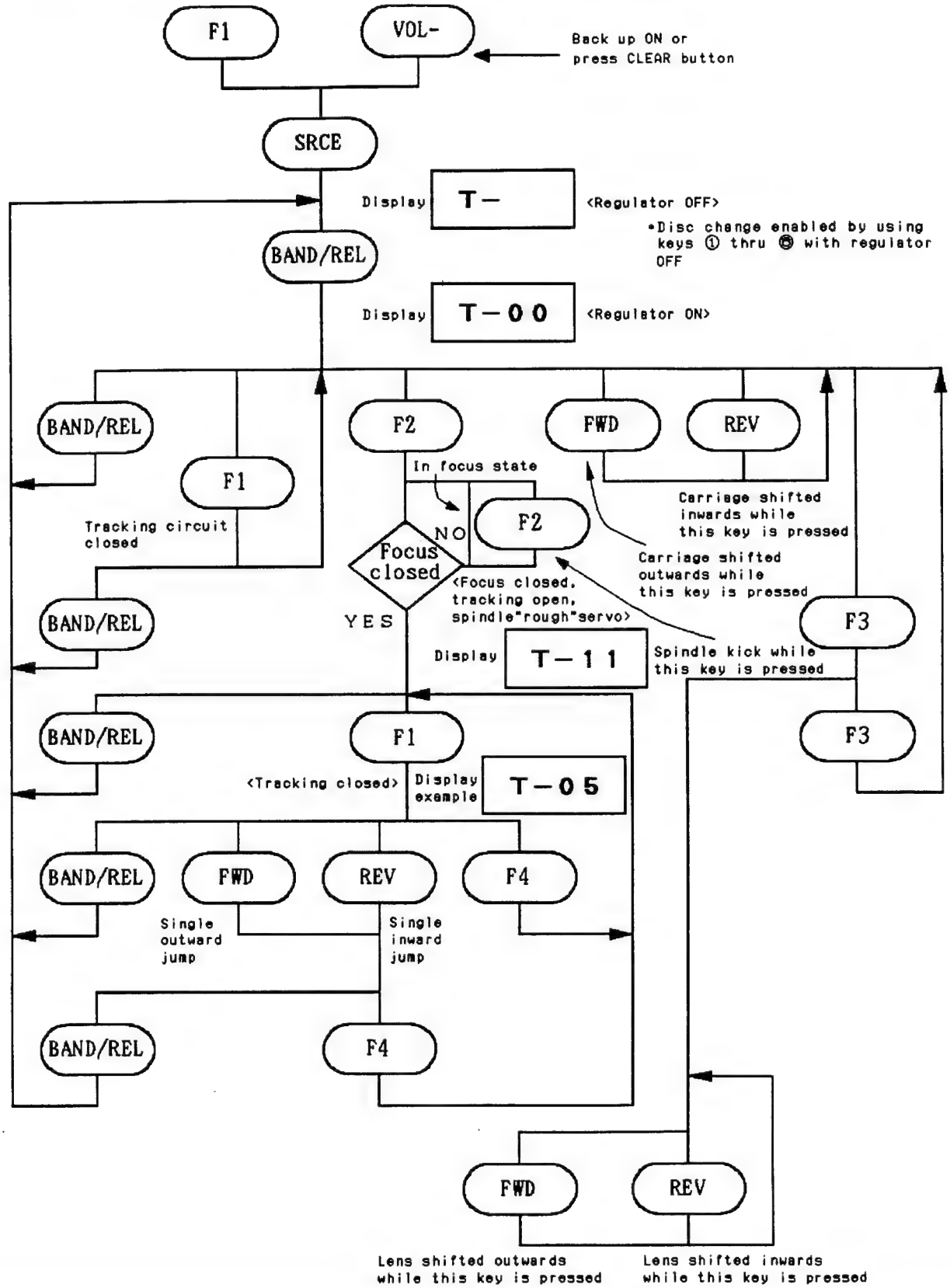
F1
VOL-
Back up ON or
press CLEAR button
SRCE
Display
T—
<Regulator OFF>
•Disc change enabled by using
keys ① thru ⑥ with regulator
OFF
BAND/REL
Display
T—00
<Regulator ON>
BAND/REL
F2
FWD
REV
F1
In focus state
Carriage shifted
inwards while
this key is pressed
Tracking circuit
closed
NO
F2
Focus
closed
Carriage shifted
outwards while
this key is pressed
<Focus closed,
tracking open,
spindle"rough"servo>
BAND/REL
YES
F3
Display
T—11
Spindle kick while
this key is pressed
BAND/REL
F1
F3
<Tracking closed>
Display
example
T—05
BAND/REL
FWD
REV
F4
Single
outward
jump
Single
inward
jump
BAND/REL
F4
FWD
REV
Lens shifted outwards
while this key is pressed
Lens shifted inwards
while this key is pressed

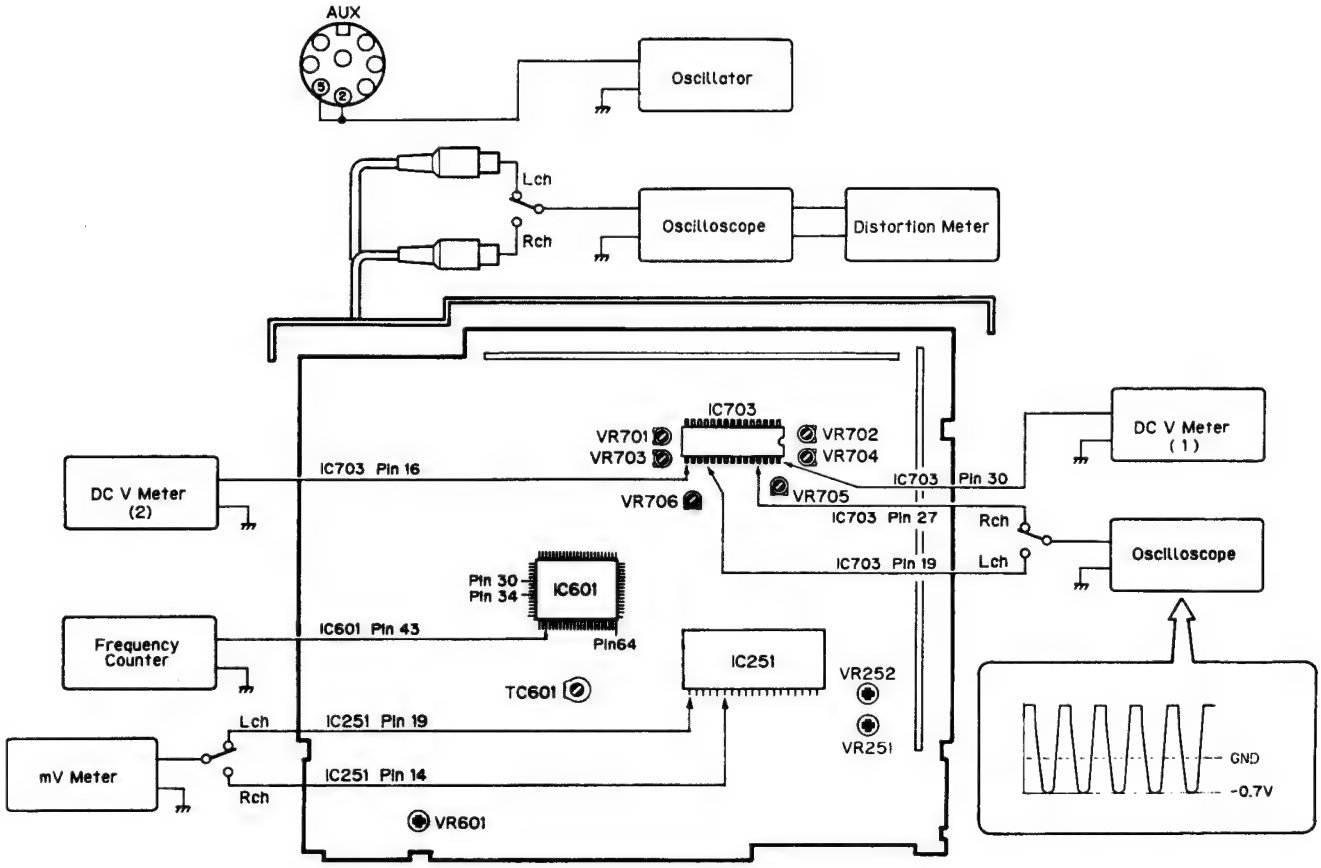
AUX
Oscillator
Lch
Rch
Oscilloscope
Distortion Meter
IC703
VR701
VR703
VR702
VR704
VR705
VR706
DC V Meter (2)
IC703 Pin 16
IC703 Pin 30
IC703 Pin 27
IC703 Pin 19
DC V Meter (1)
Rch
Lch
Oscilloscope
Pin 30
Pin 34
IC601
Pin64
Frequency Counter
IC601 Pin 43
IC251
VR252
VR251
TC601
Lch
IC251 Pin 19
mV Meter
Rch
IC251 Pin 14
VR601
GND
-0.7V

Fig. 13

● ICs

V-16M934-D110

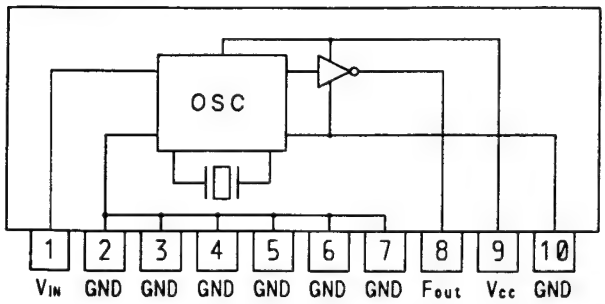

TC9197F

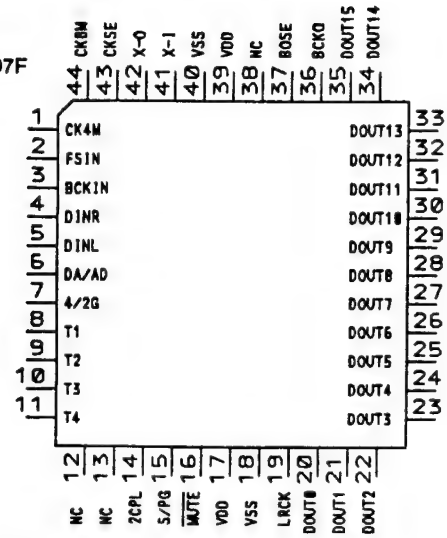

● Pin Functions (TC9197F)

Pin	Pin Name	I/O	Function and Operation
1	CK4M	O	4M clock pulse output terminal
2	FSIN	I	Input data sampling clock pulse input terminal
3	BCKIN	I	Bit clock pulse input terminal
4	DINR	I	Rch data input terminal for L/R parallel input
5	DINL	I	Lch data input terminal for L/R parallel input
6	DA/AD	I	DA/AD mode select terminal
7	4/2G	I	Conversion ratio select terminal for sampling frequency
8 ~ 11	T1 ~ T4	I	Test terminal
12	NC		
13	NC		
14	2CPL	I	2's complement offset binary select terminal
15	S/PG	I	Serial/parallel mode select terminal
16	$\overline{\text{MUTE}}$	I	Muting control terminal
17	VDD		
18	VSS		Ground
19	LRCK	O	Channel clock pulse output terminal
20	DOUT0	O	Data 0 (LSB) output terminal for 16 bit parallel output
21 ~ 34	DOUT1 ~ DOUT14	O	Data output terminal for 16 bit parallel output
35	DOUT15	O	Data 15 (MSB) output terminal for 16 bit parallel output
36	BCKO	O	Bit clock pulse output terminal
37	BOSE	I	Bit clock pulse select terminal
38	NC		
39	VDD		
40	VSS		Ground
41	X-I	I	Crystal oscillator connection terminal
42	X-O	O	Crystal oscillator connection terminal
43	CKSE	I	Clock pulse select terminal
44	CK8M	O	CK8M clock pulse output terminal

TC74HC393AF

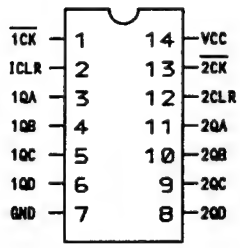

*IC's marked by * are MOS type.*
Be careful in handling them because they are very liable to be damaged by electrostatic induction.

*PD00551

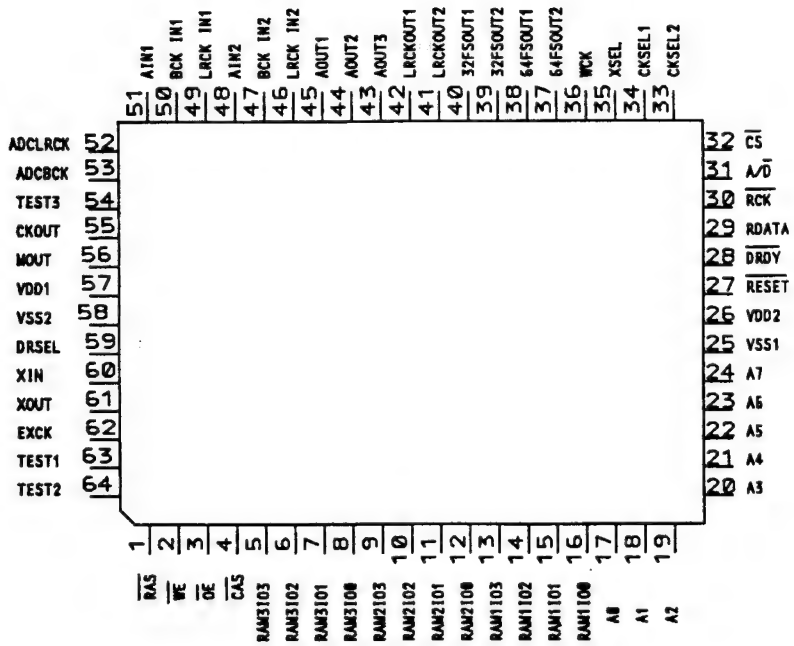

● Pin Functions (PD00551)

Pin	Pin Name	I/O	Function and Operation
1	$\overline{RAS}$	O	Low address strobe terminal for external DRAM
2	$\overline{WE}$	O	Write enable terminal for external DRAM
3	$\overline{OE}$	O	Output enable terminal for external DRAM
4	$\overline{CAS}$	O	Column address strobe terminal for external DRAM
5 ~ 8	RAM3IO3 ~ RAM3IO0	I/O	Data I/O terminal for external DRAM
9 ~ 12	RAM2IO3 ~ RAM2IO0	I/O	Data I/O terminal for external DRAM
13 ~ 16	RAM1IO3 ~ RAM1IO0	I/O	Data I/O terminal for external DRAM
17 ~ 24	A0 ~ A7	O	Address output terminal for external DRAM
25	VSS1		Ground terminal
26	VDD2		Power supply terminal
27	$\overline{RESET}$	I	Reset signal input terminal
28	$\overline{DRDY}$	O	Micro processor I/F data reception enable output terminal
29	RDATA	I	Micro processor I/F data input terminal
30	$\overline{RCK}$	I	Micro processor I/F clock pulse input terminal

Pin	Pin Name	I/O	Function and Operation
31	A/$\overline{D}$	I	Micro processor I/F address data discrimination input terminal
32	$\overline{CS}$	I	DASP chip select input terminal
33	CKSEL2	I	Select terminal for clock pulse output from CKOUT
34	CKSEL1	I	Select terminal for master clock pulse frequency
35	XSEL	I	Select terminal for oscillation/external clock pulse
36	WCK	O	Word clock pulse output terminal
37	64FSOUT2	O	64FS bit clock pulse output terminal
38	64FSOUT1		
39	32FSOUT2	O	32FS bit clock pulse output terminal
40	32FSOUT1		
41	LRCKOUT2	O	LR clock pulse output terminal
42	LRCKOUT1		
43 ~ 45	AOUT3 ~ AOUT1	O	Lch, Rch audio serial data output terminal
46	LRCKIN2	I	LR clock pulse input terminal 2 for reading in audio serial data
47	BCKIN2	I	Bit clock pulse input terminal 2 for reading in audio serial data
48	AIN2	I	Lch, Rch audio serial data input terminal 2
49	LRCKIN1	I	LR clock pulse input terminal 1 for reading in audio serial data
50	BCKIN1	I	Bit clock pulse input terminal 1 for reading in audio serial data
51	AIN1	I	Lch, Rch audio serial data input terminal 1
52	ADCLRCK	O	LR clock pulse output terminal to A/D converter
53	ADCBCK	O	Bit clock pulse output terminal to A/D converter
54	TEST3	I	Test mode terminal
55	CKOUT	O	Internal system clock pulse or master clock pulse 3/2 division output terminal
56	MOUT	O	Master clock pulse output terminal
57	VDD1		Power supply
58	VSS2		Ground
59	DRSEL	I	DRDY logic select terminal
60	XIN	I	Crystal oscillator connection terminal
61	XOUT	O	Crystal oscillator connection terminal
62	EXCK	I	External clock pulse input
63	TEST1	I	Test mode terminal
64	TEST2	I	Test mode terminal

MB81464-12

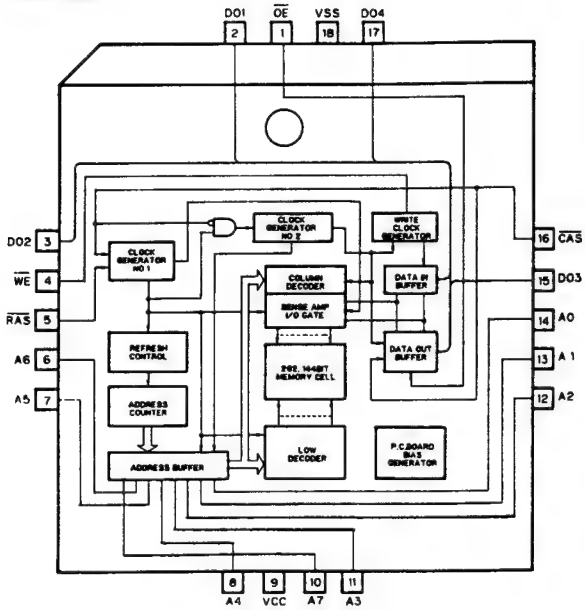

*PD0075

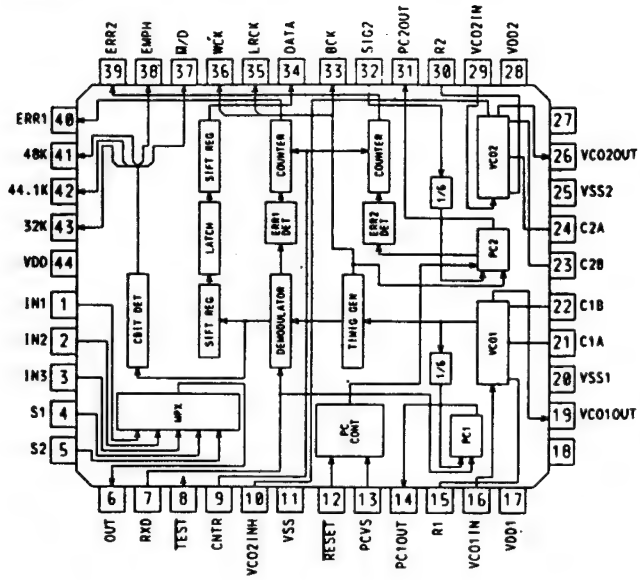

● Pin Functions (PD0075)

Pin No.	Pin Name	I/O	Function and Operation	
1	IN1	Input	Data input 1.	Digital audio data input of EIAJ format. (TTL level)
2	IN2	Input	Data input 2.	
3	IN3	Input	Data input 3.	
4	S1	Input	Input selector 1. (TTL level)	
5	S2	Input	Input selector 2. (TTL level)	
6	OUT	Output	Data MPX output.	
7	RXD	Input	Data input. Normally connected to OUT(CMOS level).	
8	$\overline{TEST}$	Input	Test mode input. Normally fixed at "H". (TTL level)	
9	CNTR	Input	Counter clock input for ERR1/2 output time(CMOS level).	
10	VCO2INH	Input	For VCO2 oscillation stop. Oscillation stop at "H". (TTL level)	
11	VSS		Logic VSS.	
12	$\overline{RESET}$	Input	Power ON reset input.	
13	PCVS	Input	VCO1/2 self-run frequency setting input.	
14	PC1OUT	Output	Phase comparator 1 output.	
15	R1		VCO1 regulating resistor connection terminal.	
16	VCO1IN	Input	VCO1 control voltage input.	
17	VDD1		VCO1 VDD.	
18			Not used.	
19	VCO1OUT	Output	VCO1 output. (384fs)	
20	VSS1		VCO1 VSS.	
21	C1A		VCO1 regulating capacity connection terminal.	
22	C1B		VCO1 regulating capacity connection terminal.	
23	C2B		VCO2 regulating capacity connection terminal.	
24	C2A		VCO2 regulating capacity connection terminal.	
25	VSS2		VCO2 VSS.	
26	VCO2OUT	Output	VCO2 output. (384fs)	
27			Not used.	

Pin No.	Pin Name	I/O	Function and Operation
28	VDD2		VCO2 VDD.
29	VCO2IN		VCO2 control voltage input.
30	R2		VCO2 regulating resistor connectin terminal.
31	PC2OUT	Output	Phase comparator 2 output.
32	SIG2	Input	V input of phase comparator 2. Normally connected to VCO2OUT.
33	BCK	Output	Demodulation data bit clock output.
34	DATA	Output	Demodulation audio data output.
35	LRCK	Output	Demodulation data L/R channel output. L channel at "H".
36	WCK	Output	Demodulation data word clock output.
37	$\overline{M}$/D	Output	MUSIC/DATA selection information output. MUSIC at "L"
38	EMPH	Output	Emphasis information output. With emphasis at "H".
39	ERR2	Output	2nd PLL UNLOCK output. UNLOCK at "H".
40	ERR1	Output	1st PLL data read error output. Error at "H".
41	48K	Output	Sampling frequency information output. Open drain for LED driver. Active at "L".
42	44.1K	Output	Sampling frequency information output. Open drain for LED driver. Active at "L".
43	32K	Output	Sampling frequency information output. Open drain for LED driver. Active at "L".
44	VDD		Logic VDD.

SM5840CS

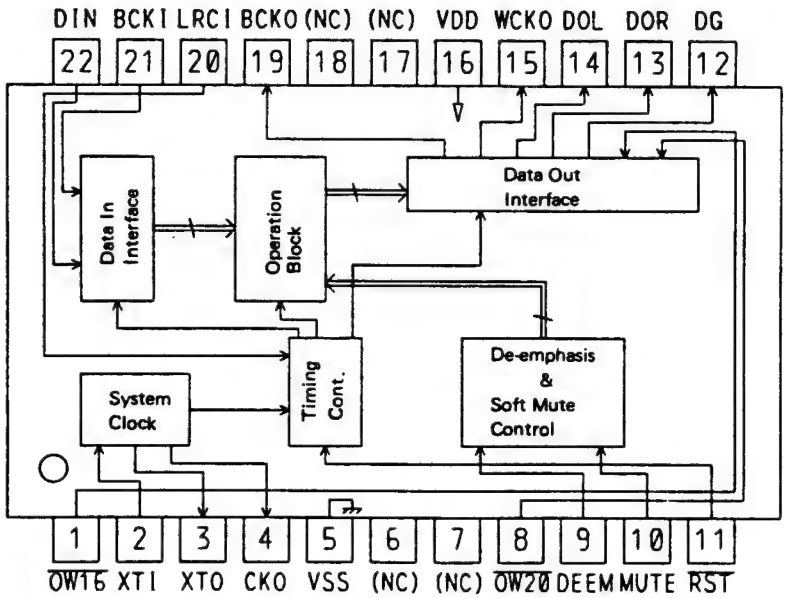

● Pin Functions (SM5840CS)

In the explanation, <fs> means the sampling frequency of input data.

Pin No.	Pin Name	I/O	Function and Operation
1	$\overline{OW16}$	Input	Output bit number selection terminal. Setting: $\overline{OW16}$ H / L; $\overline{OW20}$ H / L $\overline{OW16}$ H: 18bit output (NS-ON) / 20bit output (NS-ON) $\overline{OW16}$ L: 16bit output (NS-ON) / 18bit output (NS-OFF) Note: NS-ON Noise shaper ON NS-OFF Noise shaper OFF (test mode)
2	XTI	Input	Oscillator input terminal.
3	XTO	Output	Oscillator output terminal.
4	CKO	Output	Oscillator output clock(frequency same as for XTI terminal)
5	VSS		GND
6, 7	NC		
8	$\overline{OW20}$	Input	Output bit number selection terminal 2. (20 bit for $\overline{OW20}$=L) (18 bit for $\overline{OW20}$=H)
9	DEEM	Input	De-emphasis signal input. (De-emphasis OFF for DEEM=L) (De-emphasis ON for DEEM=H)
10	MUTE	Input	Mute signal input. (Soft mute OFF for MUTE=L) (Soft mute ON for MUTE=H)
11	$\overline{RST}$	Input	System reset (initialize)
12	DG	Output	Digridge output.
13	DOR	Output	Rch data output.
14	DOL	Output	Lch data output.
15	WCKO	Output	Output word clock.
16	VDD		VDD(5V)
17, 18	NC		
19	BCKO	Output	Output bit clock.
20	LRCI	Input	Input data sample rate (fs) clock.
21	BCKI	Input	Input bit clock.
22	DIN	Input	Input data.

*PD7008

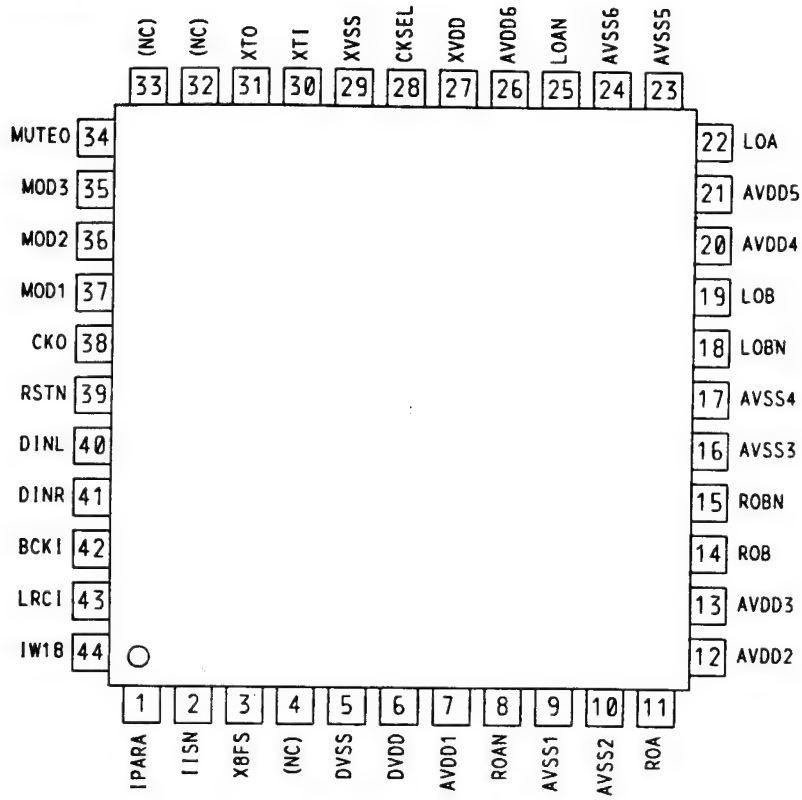

● Pin Functions (PD7008)

Pin No.	Pin Name	I/O	Function and Operation
1	IPARA	Input	Input data word timing selection. H(or open):Lch/Rch parallel input. L:Lch/Rch alternate input.
2	IISN	Input	IIS input mode selection. H(or open):Normal input mode. L:IIS input mode.
3	X8SF	Input	Input data sample frequency selection. H(or open):8xfs input mode. L:4xfs input mode.
4	NC		
5	DVSS		Digital GND.
6	DVDD		Digital power supply(5V).
7	AVDD1		Analog power supply(5V) 1.
8	ROAN	Output	Data output. PWM output(Rch A reverse phase)
9	AVSS1		Analog GND 1.
10	AVSS2		Analog GND 2.
11	ROA	Output	Data output. PWM output(Rch A normal phase)
12	AVDD2		Analog power supply(5V) 2.
13	AVDD3		Analog power supply(5V) 3.
14	ROB	Output	Data output. PWM output(Rch B normal phase)
15	ROBN	Output	Data output. PWM output(Rch B reverse phase)
16	AVSS3		Analog GND 3.
17	AVSS4		Analog GND 4.
18	LOBN	Output	Data output. PWM output(Lch B reverse phase)
19	LOB	Output	Data output. PWM output(Lch B normal phase)
20	AVDD4		Analog power supply(5V) 4.
21	AVDD5		Analog power supply(5V) 5.

Pin No.	Pin Name	I/O	Function and Operation
22	LOA	Output	Data output. PWM output(Lch A normal phase)
23	AVSS5		Analog GND 5.
24	AVSS6		Analog GND 6.
25	LOAN	Output	
26	AVDD6		Analog power supply(5V) 6.
27	XVDD		Clock power supply(5V).
28	CKSEL	Input	L level fixing input.
29	XVSS		Clock GND.
30	XTI	Input	X'tal connection terminal/external clock input terminal.
31	XTO	Output	X'tal connection terminal.
32, 33	NC		
34	MUTEO	Output	Muting output.
35 | 37	MOD3 | MOD1	Input	Selection of combination between system clock input frequency and noise shaper operation frequency.
38	CKO	Output	256fs/384fs clock output.
39	RSTN	Input	Reset input.
40	DINL	Input	Lch serial data input.
41	DINR	Input	Rch serial data input.
42	BCKI	Input	Serial input data bit clock(data loading at rise edge).
43	LRCI	Input	Input data sample frequency clock.
44	IW18	Input	Input data word length selection. H(or open):18 bit length. L:16 bit length.

In the explanation, <fs> means the sample frequency (44.1kHz for CD) of the raw signal data.

TC74HCU04AF

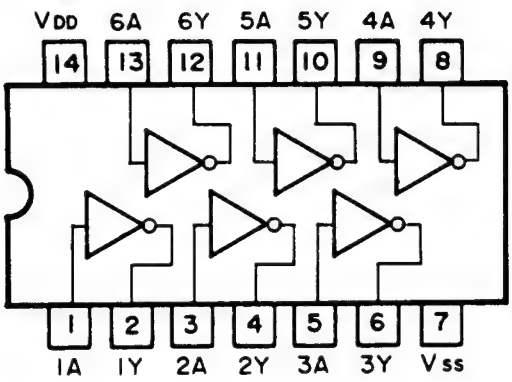

NJM3404AM

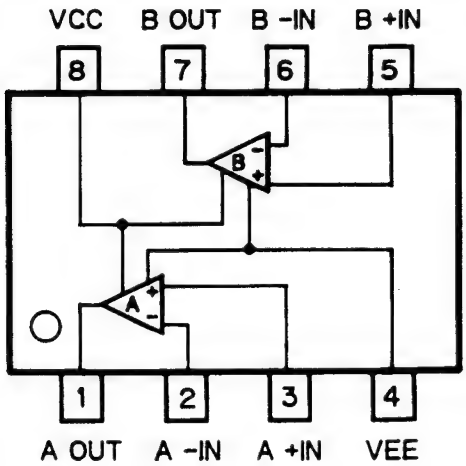

M5238FP

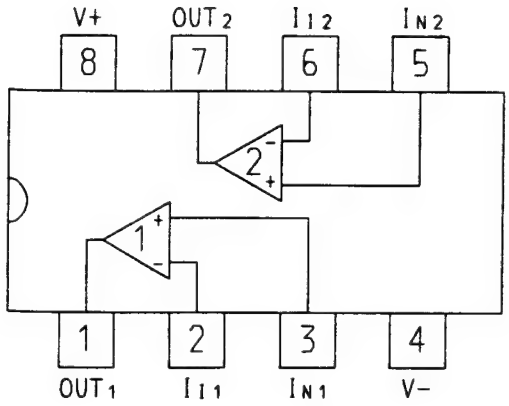

S-80743AN-D7

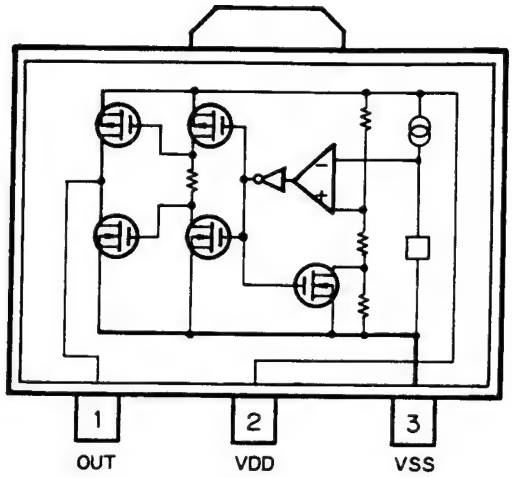

*PD4274A

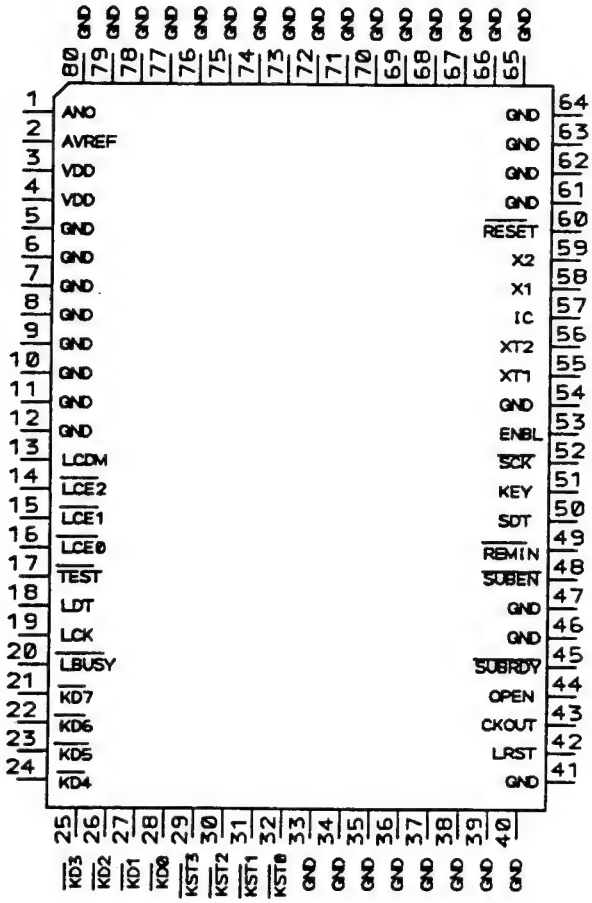

● **Pin Functions (PD4274A)**

Pin	Pin name	I/O	Output Format	Function and Operation
1	ANO			Connect to GND.
2	AVREF			Connect to GND.
3, 4	VDD			VDD
5-12				Connect to GND.
13	LCDM	output	C	LCD controller command/data appointment output.
14	LCE2	output	C	LCD controller chip select output.
|	|			
16	LCE0			
17	$\overline{\text{TEST}}$			Test program.
18	LDT	output	C	LCD controller serial data output.
19	LCK	output	C	LCD controller serial clock output.
20	$\overline{\text{LBUSY}}$	input		LCD controller BUSY input.
21	$\overline{\text{KD7}}$	input		Key data return input.
|	|			
28	$\overline{\text{KD0}}$			
29	KST3	output	NM	Key data strobe output.
|	|			
32	KST0			
33	GND			GND
33-41				Connect to GND.
42	LRST	output	C	LCD controller reset output.
43	CLKOUT	output	C	LCD controller clock output.
44				Open
45	$\overline{\text{SUBRDY}}$	input		Communication ready input.
46, 47				Connect to GND.
48	$\overline{\text{SUBEN}}$	input		Communication request output.
49	$\overline{\text{REMIN}}$	input		Remote control input.
50	SDT	input		Serial data input.
51	KEY	output	C	Serial data output.
52	$\overline{\text{SCK}}$	output	C	Serial clock.
53	ENBL			Test program enable.
54	GND			GND
55	XT1			Connect to GND.
56	XT2			Open
57	IC			Connect to GND.
58	X1			X'tal connection terminal.
59	X2			
60	$\overline{\text{RESET}}$	input		Reset input.
61-80				Connect to GND.

Output Format	Meaning
C	C-MOS
NM	Neutral resistivity N channel open drain

NJM79L05UA

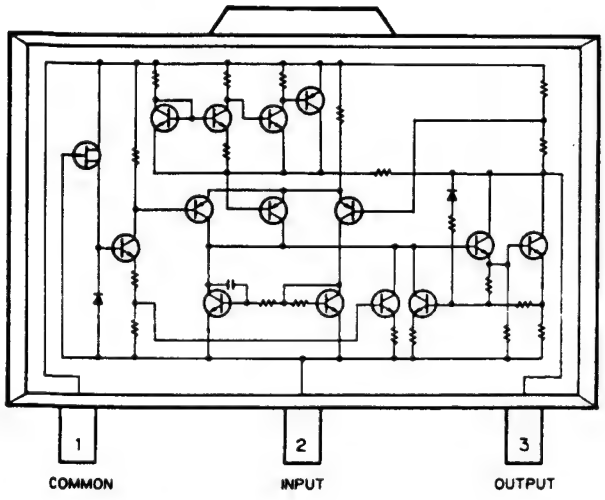

NJM78M05A

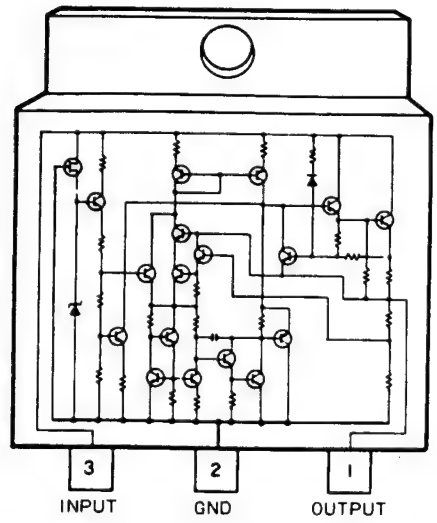

AN6540

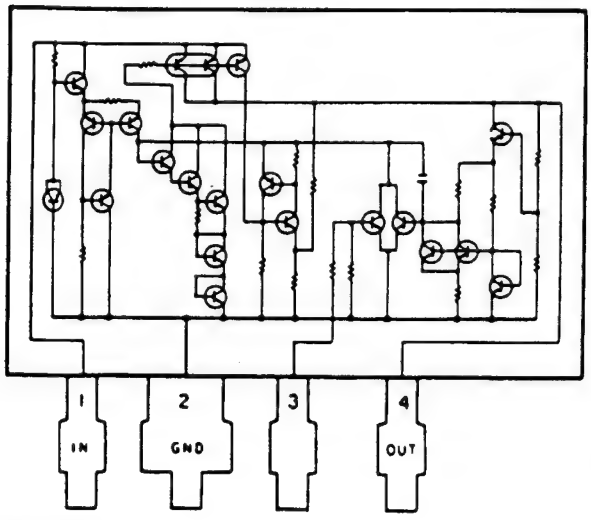

NJM78L05UA

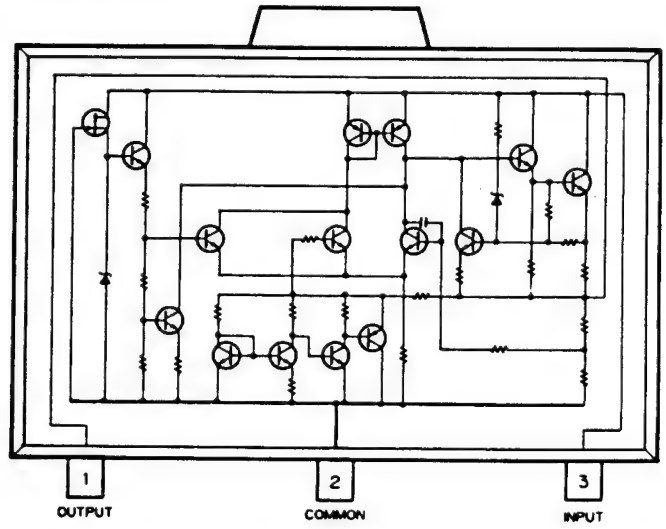

M54548AL

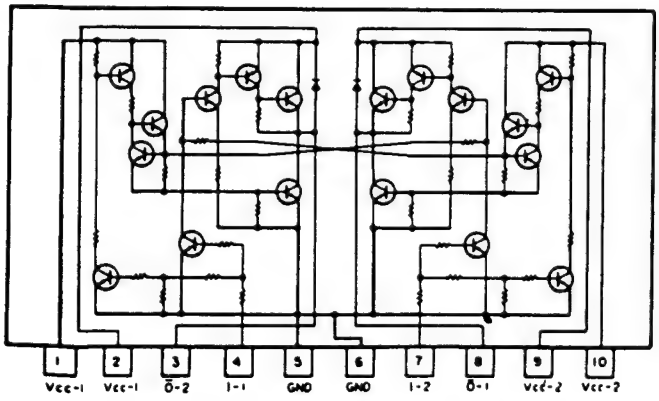

CWV1014

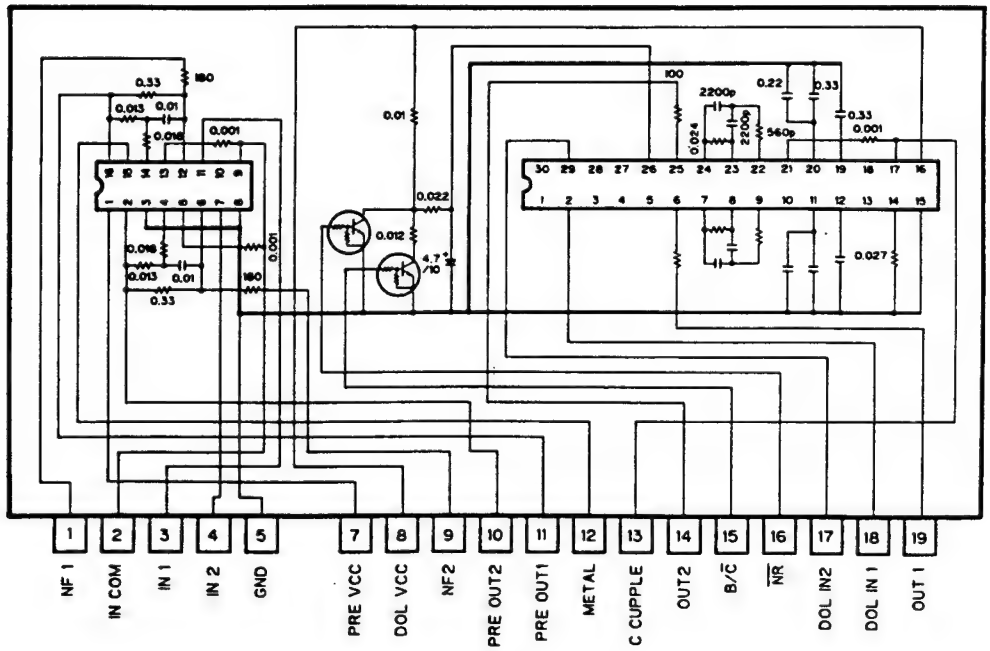

PM2002

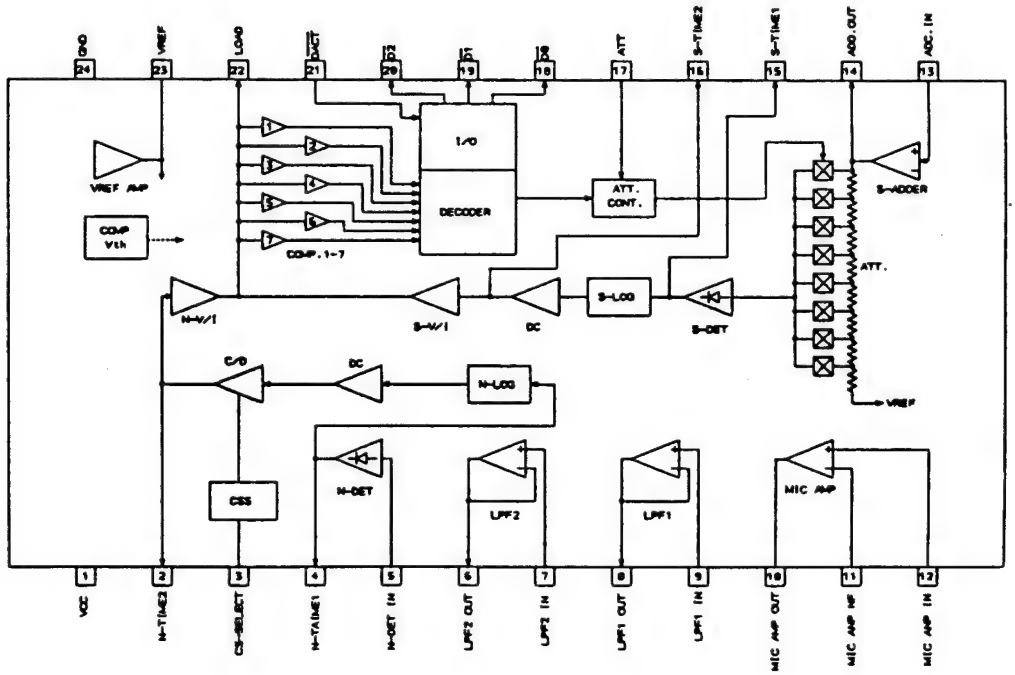

*PD4273A

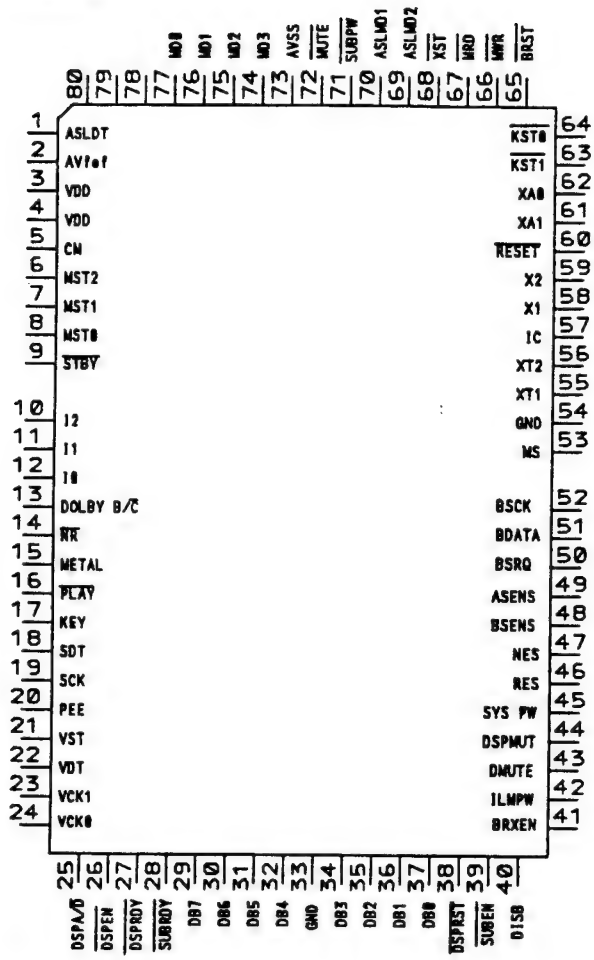

● Pin Functions (PD4273A)

Pin	Pin name	I/O	Output Format	Function and Operation
1	ASLDT	input		ASL data input.
2	AVREF			A/D converter reference voltage.
3	VDD			VDD
4	VDD			
5	CM	output	C	CM control output.
6 | 8	MST2 | MST0	output	C	Mechanism switch strobe output.
9	STBY1	output	C	PA3022 stand-by control.
10 | 12	I2 | I0	output	C	PA3022 control data.
13	DLBYBC	output	C	Dolby NR B/C switching
14	NR	output	C	Noise reduction output.
15	METAL	output	C	Metal output.

Pin	Pin name	I/O	Output Format	Function
16	PLAY	output	C	MS filter switching.
17	KEY	input		Serial data input.
18	SDT	output	C	Serial data output.
19	SCK			Serial clock.
20	PEE	output	C	Buzzer On output.
21	VST	output	C	E-VOL strobe output.
22	VDT	output	C	E-VOL data output.
23	VCK1	output	C	E-VOL clock output (rear).
24	VCK0	output	C	E-VOL clock output (front).
25	DSPA/D	output	C	DSP address/data switching output.
26	$\overline{\text{DSPEN}}$	output	C	DSP chip enable output.
27	$\overline{\text{DSPRDY}}$	input		DSP ready input.
28	$\overline{\text{SUBRDY}}$	input		Communication ready input.
29 | 32	DB7 | DB4	input/ output	NM	Memory data input/output.
33	GND			GND
34 | 37	DB3 | DB0	input/ output	NM	Memory data input/output.
38	$\overline{\text{DSPRST}}$	output	C	DSP reset output.
39	$\overline{\text{SUBEN}}$	output	C	Communication request output.
40	DISB	output	C	AUX control output.
41	BRXEN	input/ output	C	BUS reception enable.
42	ILMPW	output	C	Illumination power output.
43	DMUTE	output	C	Deck mute output.
44	DSPMUT	output	C	DSP mute output.
45	SYSPW	output	C	System power output.
46	RES	input		Reel pulse detector input-reverse.
47	NES	input		Reel pulse detector input-forward.
48	BSENS	input		BACK-UP +B sensor input.
49	ASENS	input		ACC +B sensor input.
50	$\overline{\text{BSRQ}}$	input		BUS polling request input.
51	BDATA			BUS serial data.
52	BSCK			BUS serial clock.
53	MS	input		MS pulse input.
54	GND			GND
55	XT1			Connect to GND.
56	XT2			Open.
57	IC			Connect to GND.
58	X1			X'tal connection terminal.
59	X2			
60	$\overline{\text{RESET}}$	input		Reset input.
61	XA1	output	NM	Address output 1.
62	XA0	output	NM	Address output 0.
63	$\overline{\text{KST1}}$	output	NM	Key strobe output.
64	$\overline{\text{KST0}}$	output	NM	Key strobe output.
65	$\overline{\text{BRST}}$	output	NM	BUS reset.
66	$\overline{\text{MWR}}$	output	NM	Memory write strobe output.

Pin	Pin name	I/O	Output Format	Function
67	$\overline{MRD}$	output	NM	Memory read strobe output.
68	$\overline{XST}$	output	NM	Strobe output.
69	ASLMD2	output	NM	ASL mode 2.
70	ASLMD2	output	NM	ASL mode 1.
71	$\overline{SUBPW}$	output	NM	IC903 power control.
72	$\overline{MUTE}$	output	NM	Mute output.
73	AVSS			A/D converter GND.
74 | 77	MD3 | MD0	input		Mechanism switch sensor return input.
78-80				Connect to GND.

Output Format	Meaning
C	C-MOS
NM	Neutral resistivity N channel open drain

MSM82C55A-2GS

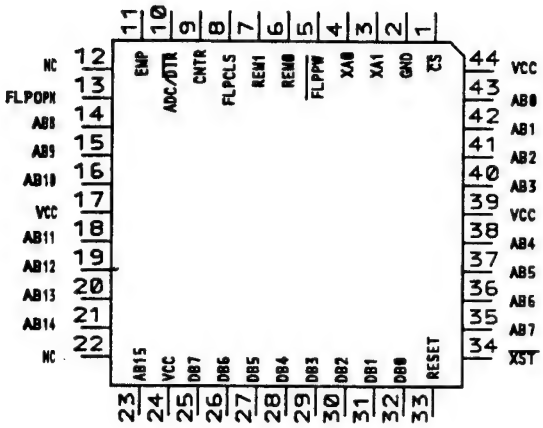

● **Pin Functions (MSM82C55A-2GS)**

Pin	Pin name	I/O	Output Format	Function and Operation
1	$\overline{CS}$	input		Chip select input.
2	GND			GND
3	XA1	input		Address input 1.
4	XA0	input		Address input 2.
5	$\overline{FLPPW}$	output	C	Motor driver power control.
6	REM1	output	C	AUX control output 1.
7	REM0	output	C	AUX control output 0.
8	$\overline{FLPCLS}$	output	C	Front panel close output.
9	CNTR	output	C	DIR counter clock output.
10	ADC/$\overline{DIR}$	output	C	DIR ADC/DIR switching output.
11	EMP	output	C	
12	NC			
13	FLPOPN	output	C	Front panel open output.
14 | 16	AB8 | AB10	output	C	Memory address output.
17	VCC			VCC +5V
18 | 21	AB11 | AB14	output	C	Memory address output.
22	NC			
23	AB15	output	C	Memory address output.
24	VCC			VCC +5V
25 | 32	DB7 | DB0	input/ output	C	Data input.
33	RESET	input		Reset input.
34	$\overline{XST}$	input		Strobe input.
35 | 38	AB7 | AB4	output	C	Memory address output.
39	VCC			VCC
40 | 43	AB3 | AB0	output	C	Memory address output.
44	VCC			

Output Format	Meaning
C	C-MOS
NM	Neutral resistivity N channel open drain

CXK5816M-15L

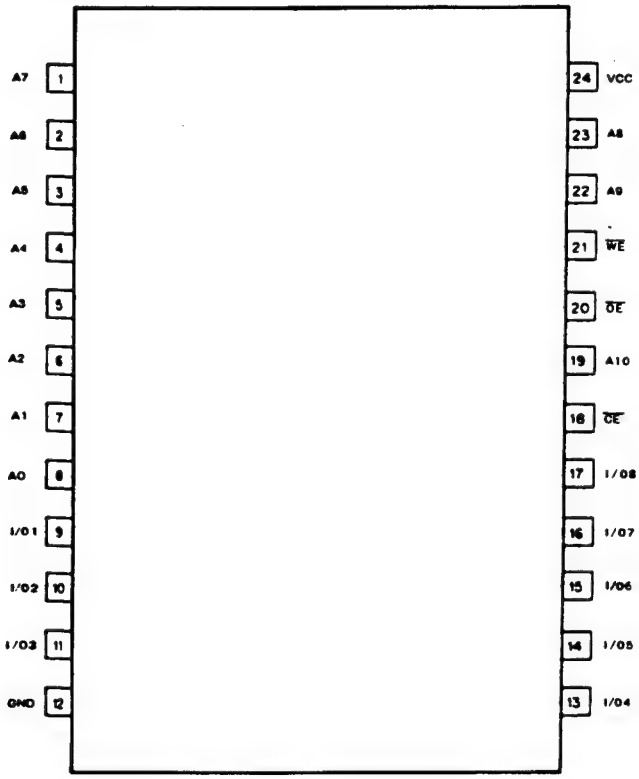

PDG062B

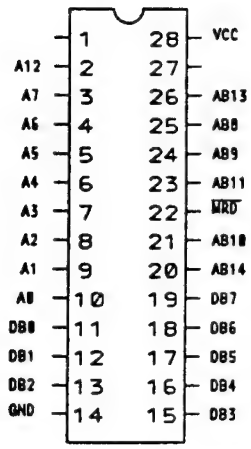

TC4S81F

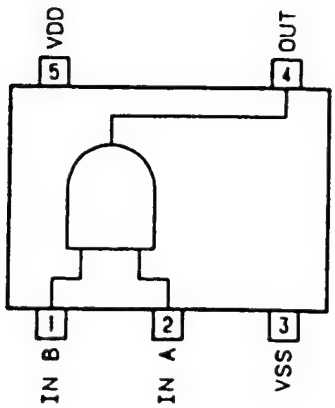

TC74HC245AF

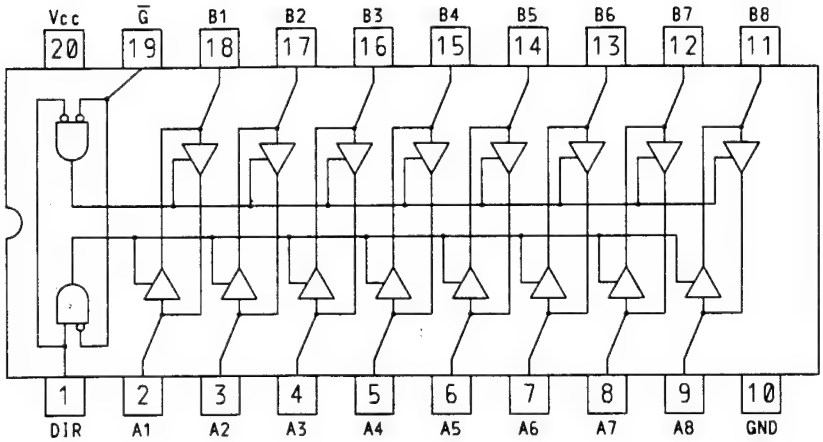

PA3022

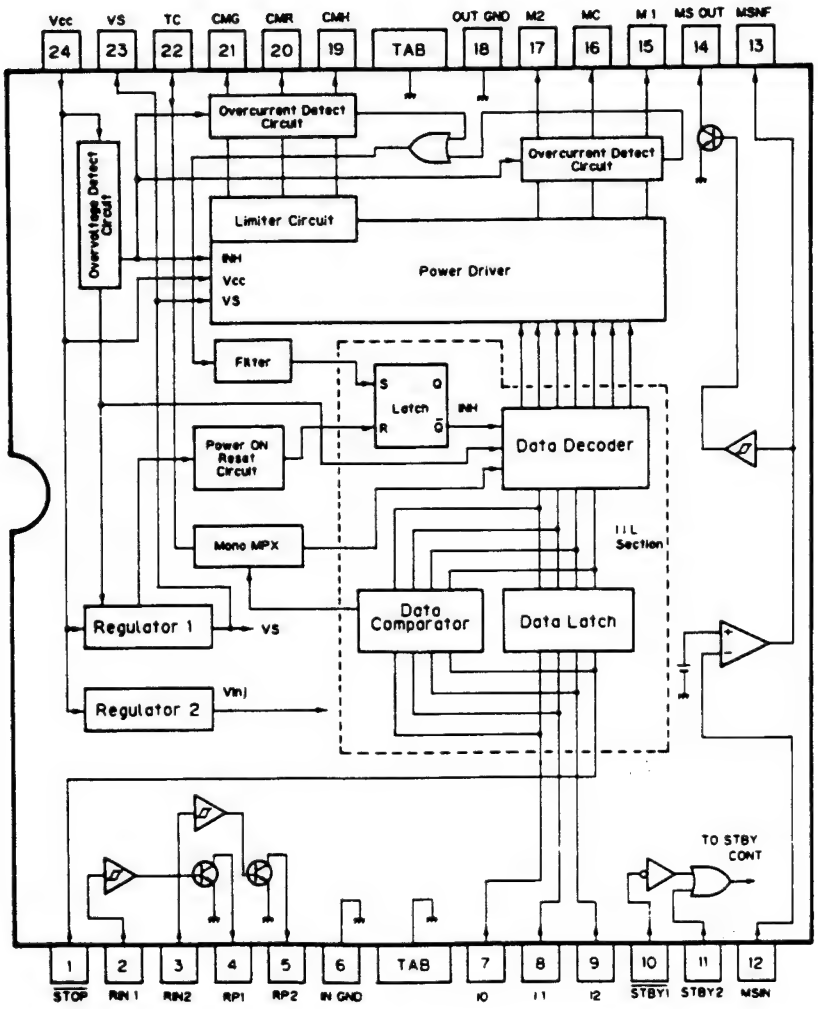

UPC4570G

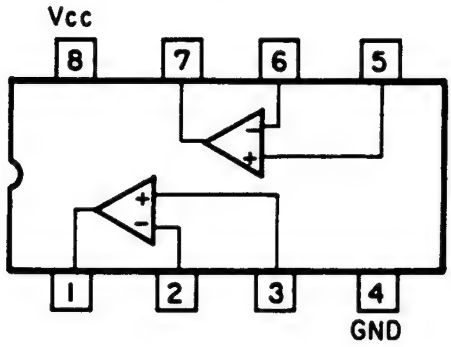

UPD7228AG

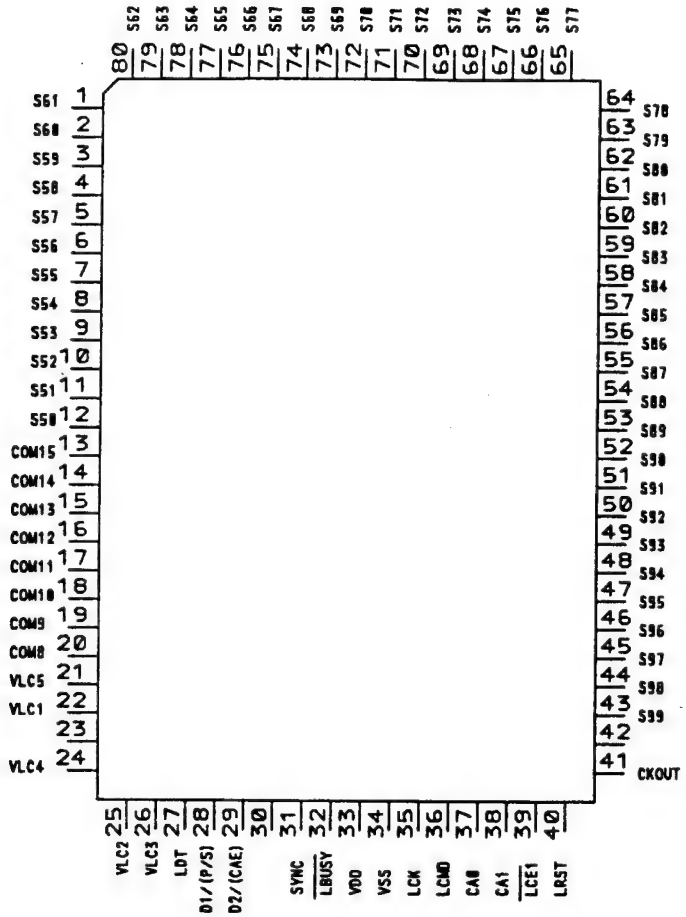

TD6726N

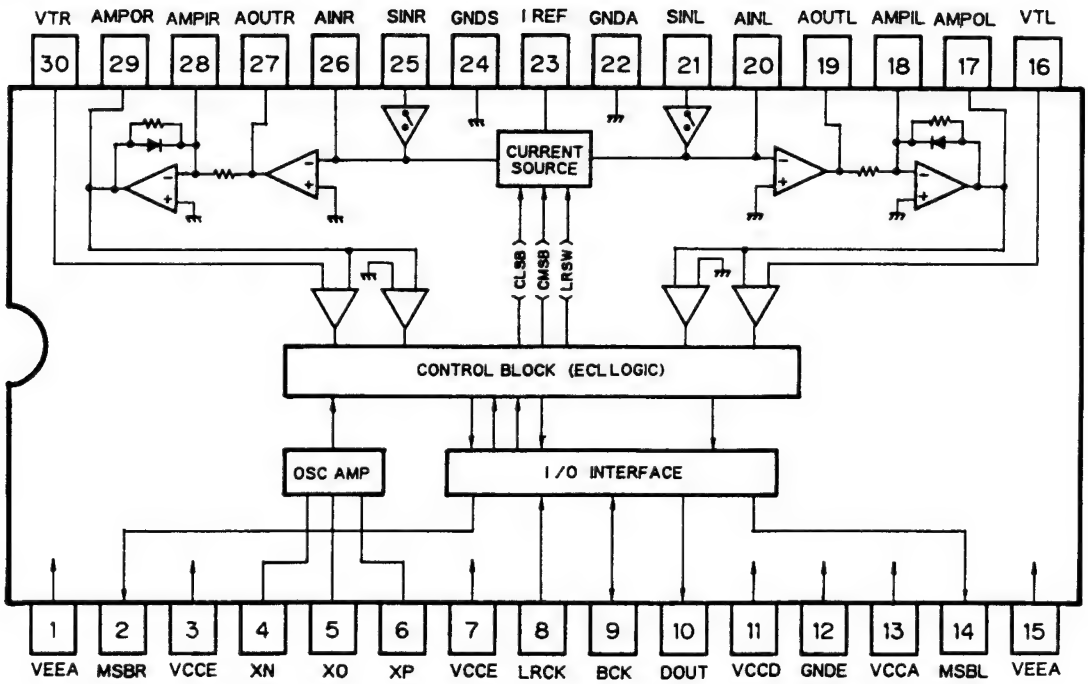

● Pin Functions (TD6726N)

Pin	Pin Name	I/O	Function and Operation
1	VEEA		Analog negative power supply voltage terminal (−5V)
2	MSBR	O	Rch MSB signal output terminal
3	VCCE		ECL logic positive power supply voltage terminal (+5V)
4	XN	I	Oscillation amplifier I/O terminal
5	XO	O	
6	XP	I	
7	VCCE		ECL logic positive power supply voltage terminal (+5V)
8	LRCK	I	LR clock pulse input terminal
9	BCK	I	Bit clock pulse input terminal
10	DOUT	O	Digital audio data output terminal
11	VCCD		Digital positive power supply voltage terminal (+5V)
12	GNDE		ECL logic ground terminal
13	VCCA		Analog positive power supply voltage terminal (+5V)
14	MSBL	O	Lch MSB signal output terminal
15	VEEA		Analog negative power supply voltage terminal (−5V)
16	VTL	I	Lch comparator reference voltage terminal
17	AMPOL	O	Lch DC gain amplifier output terminal
18	AMPIL	I	Lch DC gain amplifier input terminal
19	AOUTL	O	Lch integrating amplifier output terminal
20	AINL	I	Lch integrating amplifier input terminal
21	SINL	I	Lch audio analog signal input terminal
22	GNDA		Analog ground terminal
23	IREF	I	Integrating reference current input terminal
24	GNDS		Analog signal ground terminal
25	SINR	I	Rch audio analog signal input terminal
26	AINR	I	Rch integrating amplifier input terminal
27	AOUTR	O	Rch integrating amplifier output terminal
28	AMPIR	I	Rch DC gain amplifier input terminal
29	AMPOR	O	Rch DC gain amplifier output terminal
30	VTR	I	Rch comparator reference voltage terminal

KHA175

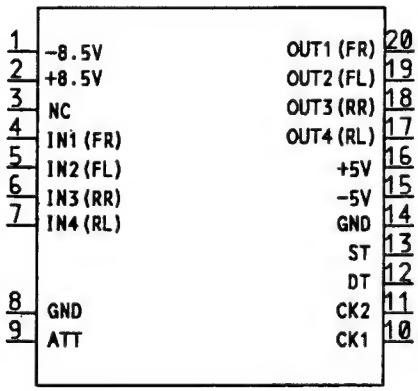
1 -8.5V
2 +8.5V
3 NC
4 IN1 (FR)
5 IN2 (FL)
6 IN3 (RR)
7 IN4 (RL)
8 GND
9 ATT
OUT1 (FR) 20
OUT2 (FL) 19
OUT3 (RR) 18
OUT4 (RL) 17
+5V 16
-5V 15
GND 14
ST 13
DT 12
CK2 11
CK1 10

● **LCD (CAW1107)**

SEGMENT

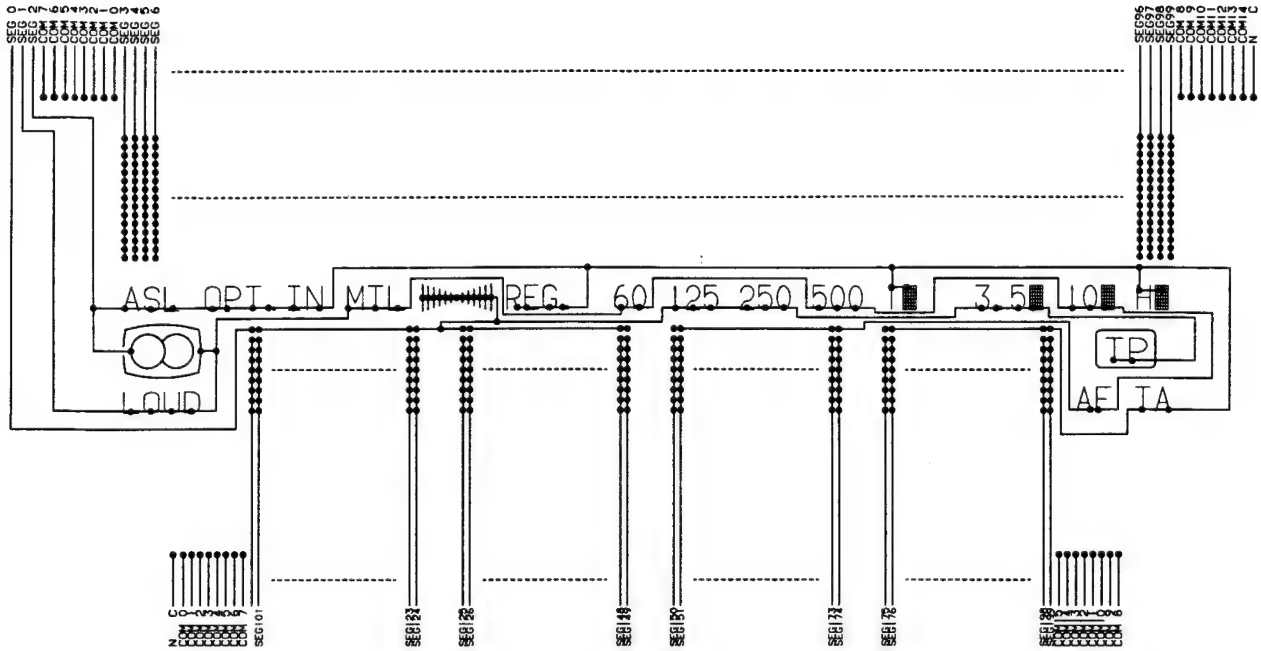

COMMON

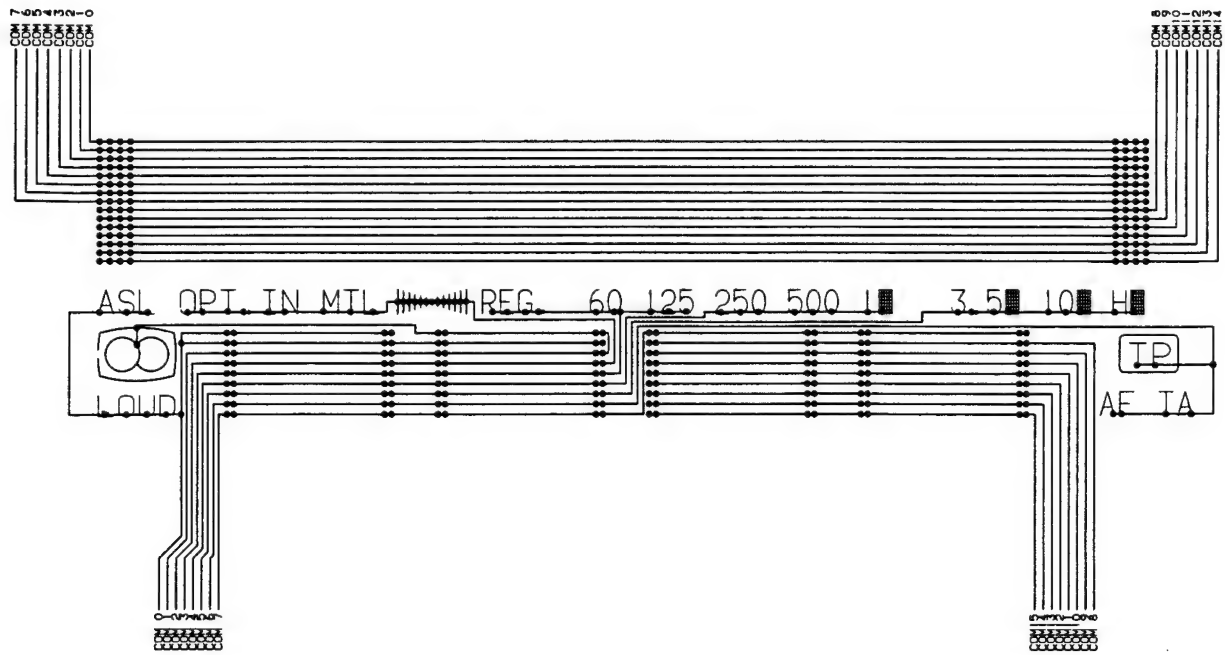

7. CONNECTION DIAGRAM (1)

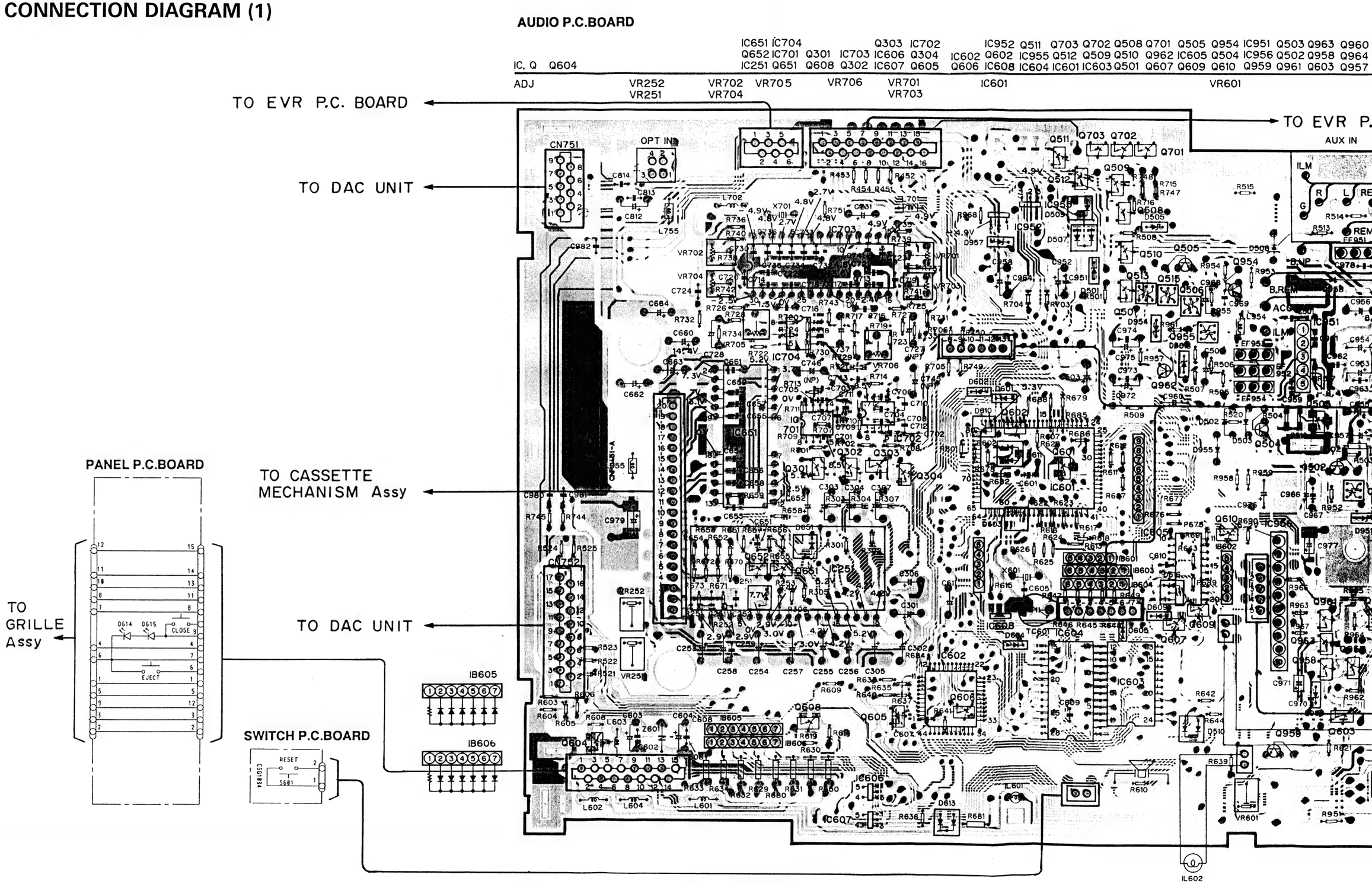

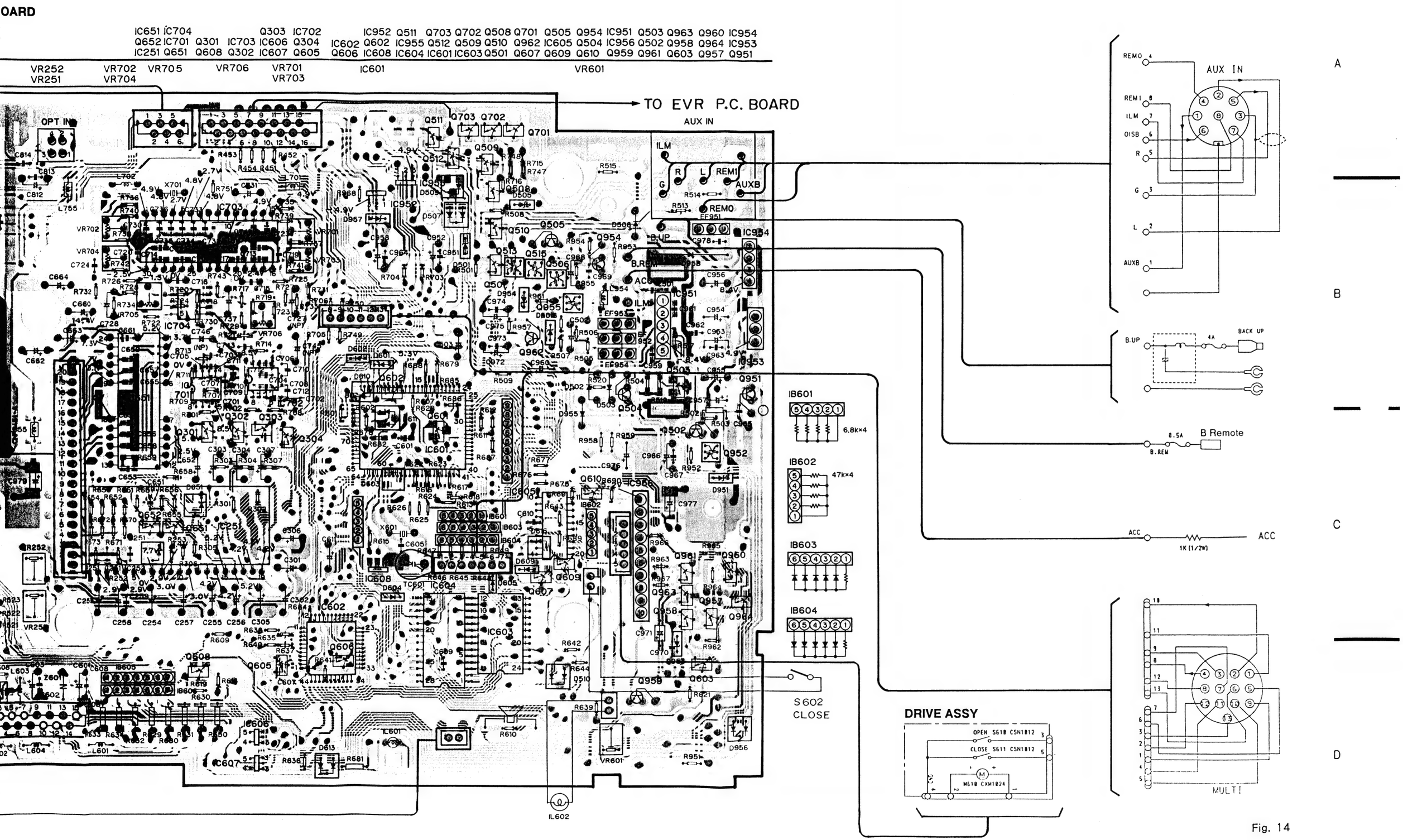
BOARD
IC651 IC704 Q303 IC702
Q652 IC701 Q301 IC703 IC606 Q304
IC251 Q651 Q608 Q302 IC607 Q605
IC602 Q606
IC952 Q511 Q703 Q702 Q508 Q701 Q505 Q954 IC951 Q503 Q963 Q960 IC954
Q602 IC608 IC955 Q512 Q509 Q510 Q962 IC605 Q504 IC956 Q502 Q958 Q964 IC953
IC604 IC601 Q603 Q601 Q501 Q507 Q506 Q955 Q961 Q957 Q951
VR252 VR251 VR702 VR704 VR705 VR706 VR701 VR703 IC601 VR601
TO EVR P.C. BOARD
AUX IN
OPT IN
ILM
R
L
REM1
AUXB
G
REMO
B.UP
B.REM
ACC
IB601
6.8k×4
IB602
47k×4
IB603
IB604
S602
CLOSE
DRIVE ASSY
OPEN S610 CSN1812
CLOSE S611 CSN1812
M610 CXM1824
IL602
VR601
REMO
REM1
ILM
OISB
R
G
L
AUXB
AUX IN
B.UP
4A
BACK UP
8.5A
B Remote
B.REM
ACC
1K (1/2W)
MULTI
A
B
C
D

Fig. 14

8. SCHEMATIC CIRCUIT DIAGRAM (1)

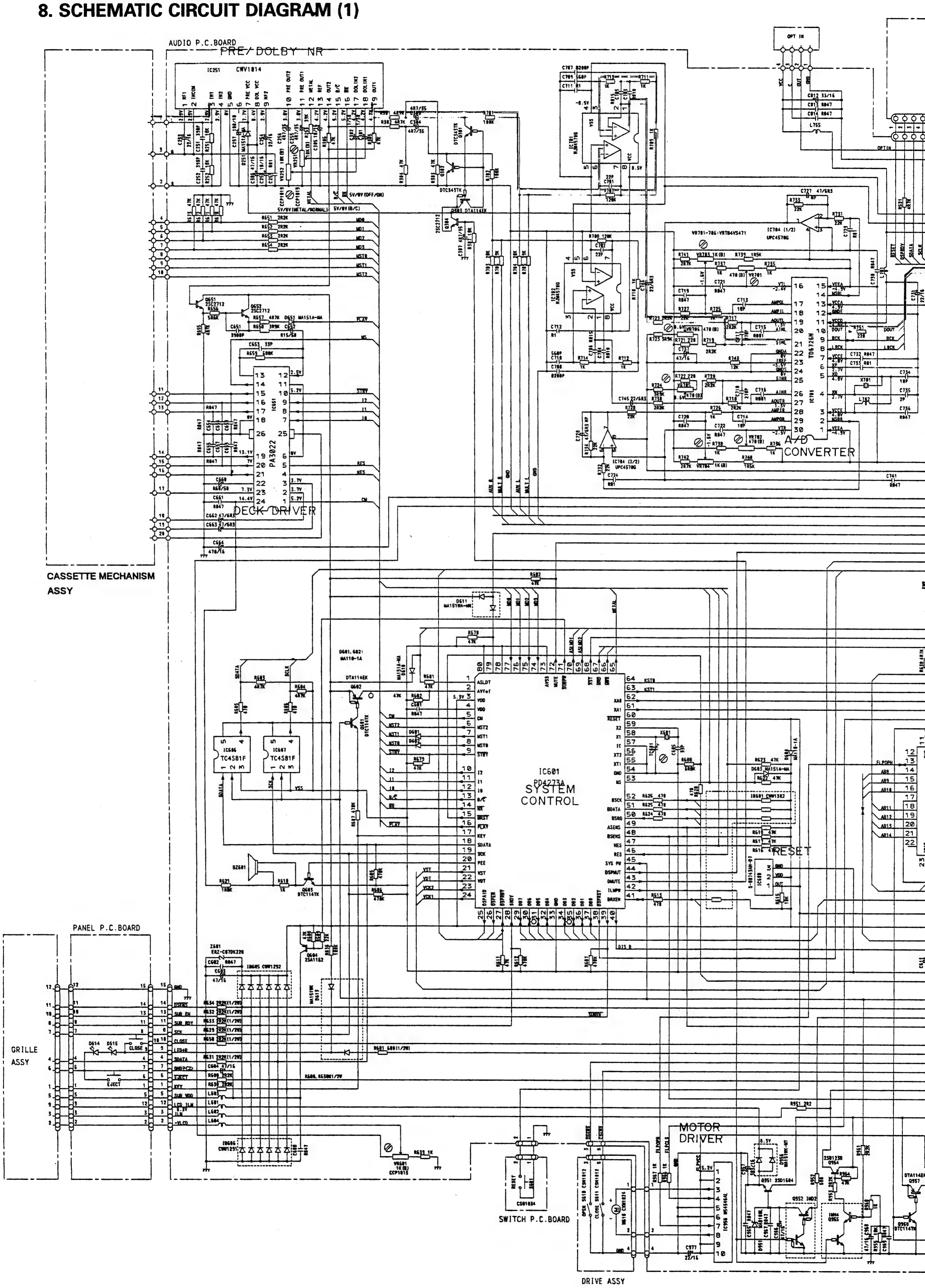

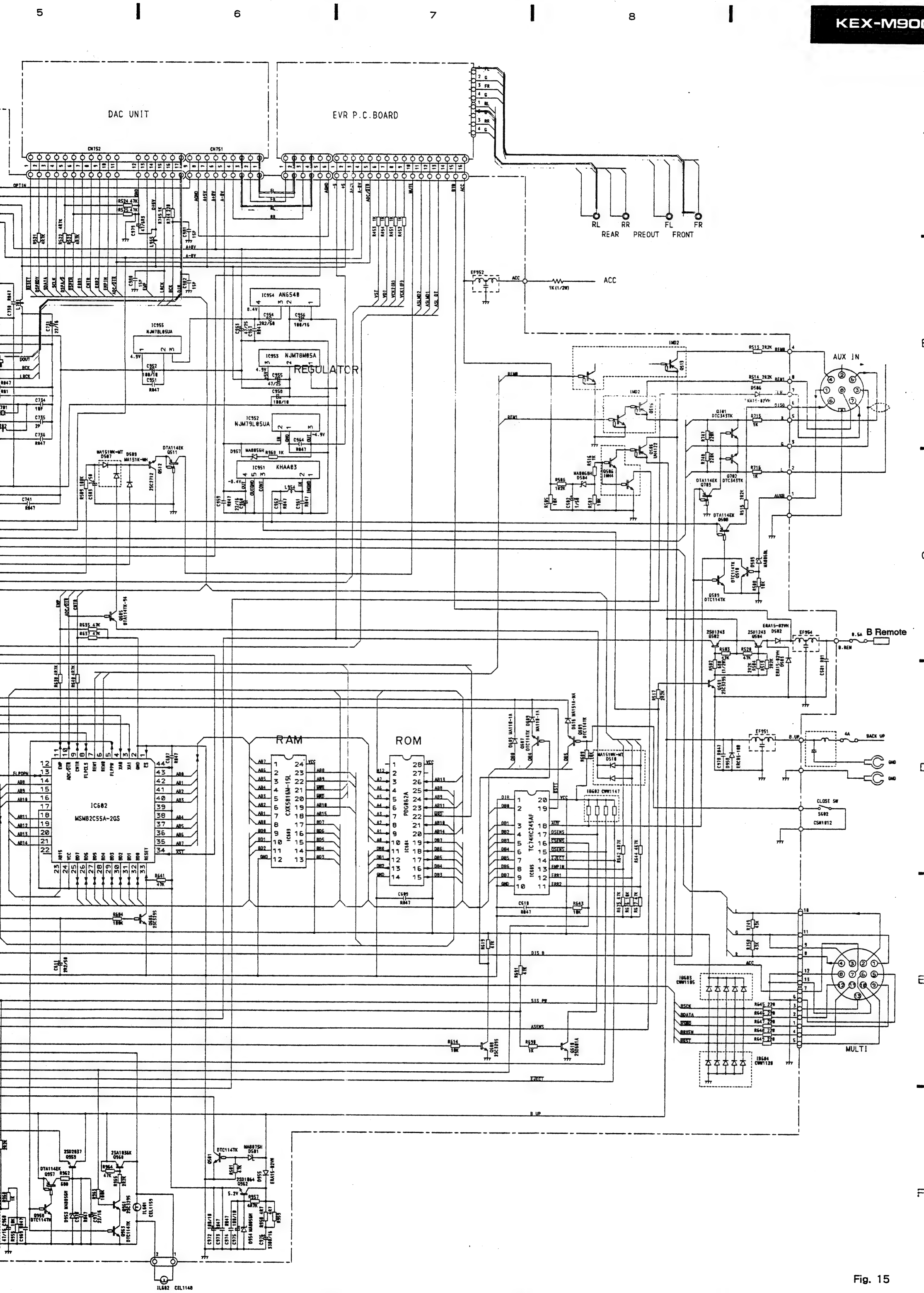
DAC UNIT
EVR P.C.BOARD
CN752
CN751
RL
REAR
RR
PREOUT
FL
FRONT
FR
ACC
AUX IN
REGULATOR
IC954 AN6548
IC955 NJM78L05UA
IC953 NJM78M05A
IC952 NJM79L05UA
IC951 KHAA03
B Remote
BACK UP
CLOSE SW
RAM
ROM
IC602 MSM82C55A-2GS
IC603 CXK5816N-15L
IC604 PDG862A
IC605 TC74HC245AF
MULTI

Fig. 15

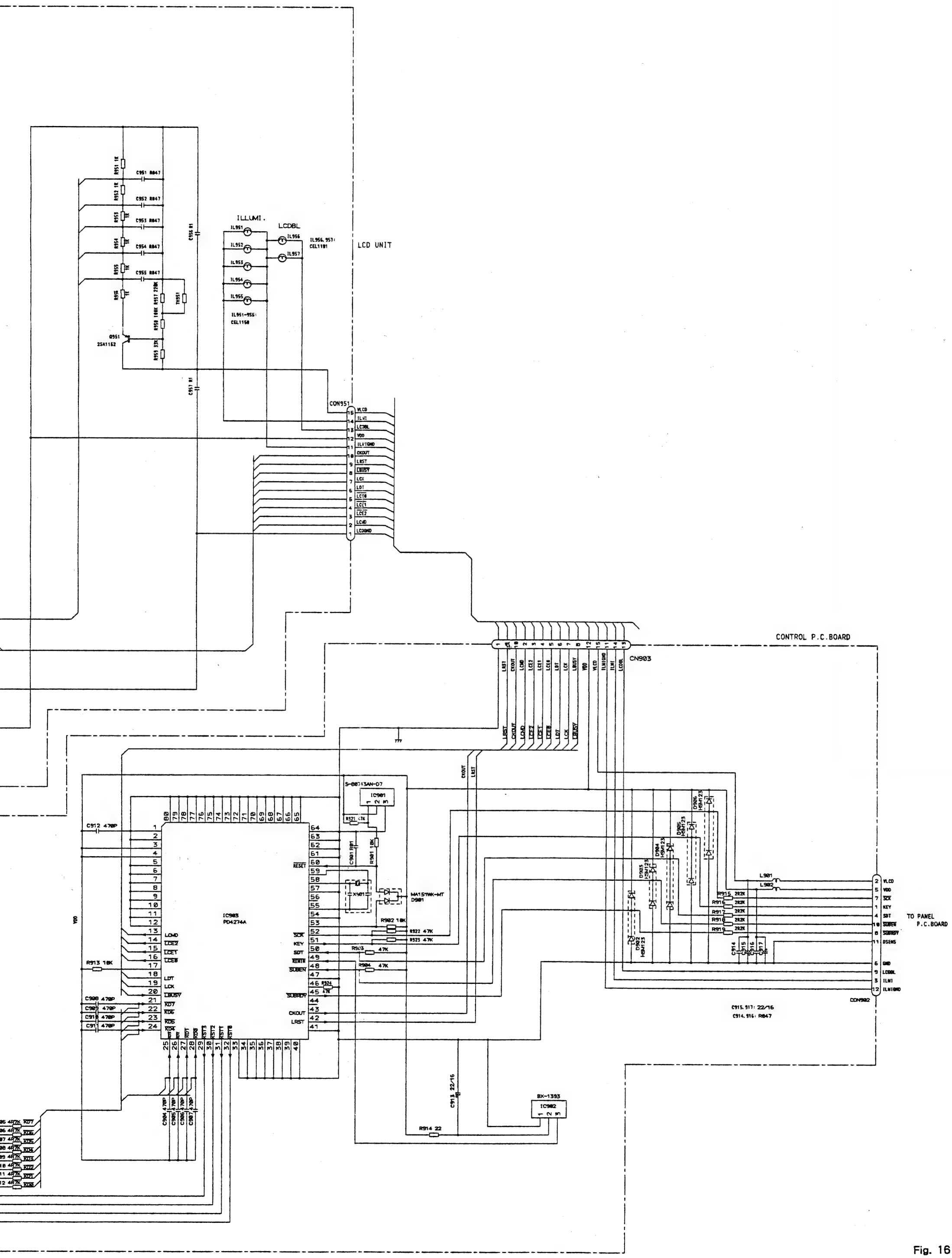
LCD UNIT
ILLUMI.
LCDBL
CON951
CONTROL P.C.BOARD
CN903
IC901
IC903
PD4274A
S-80743AN-D7
IC902
BX-1393
TO PANEL
P.C.BOARD
CDN902

Fig. 16

9. SCHEMATIC CIRCUIT DIAGRAM (2)

● **Grille Assy**

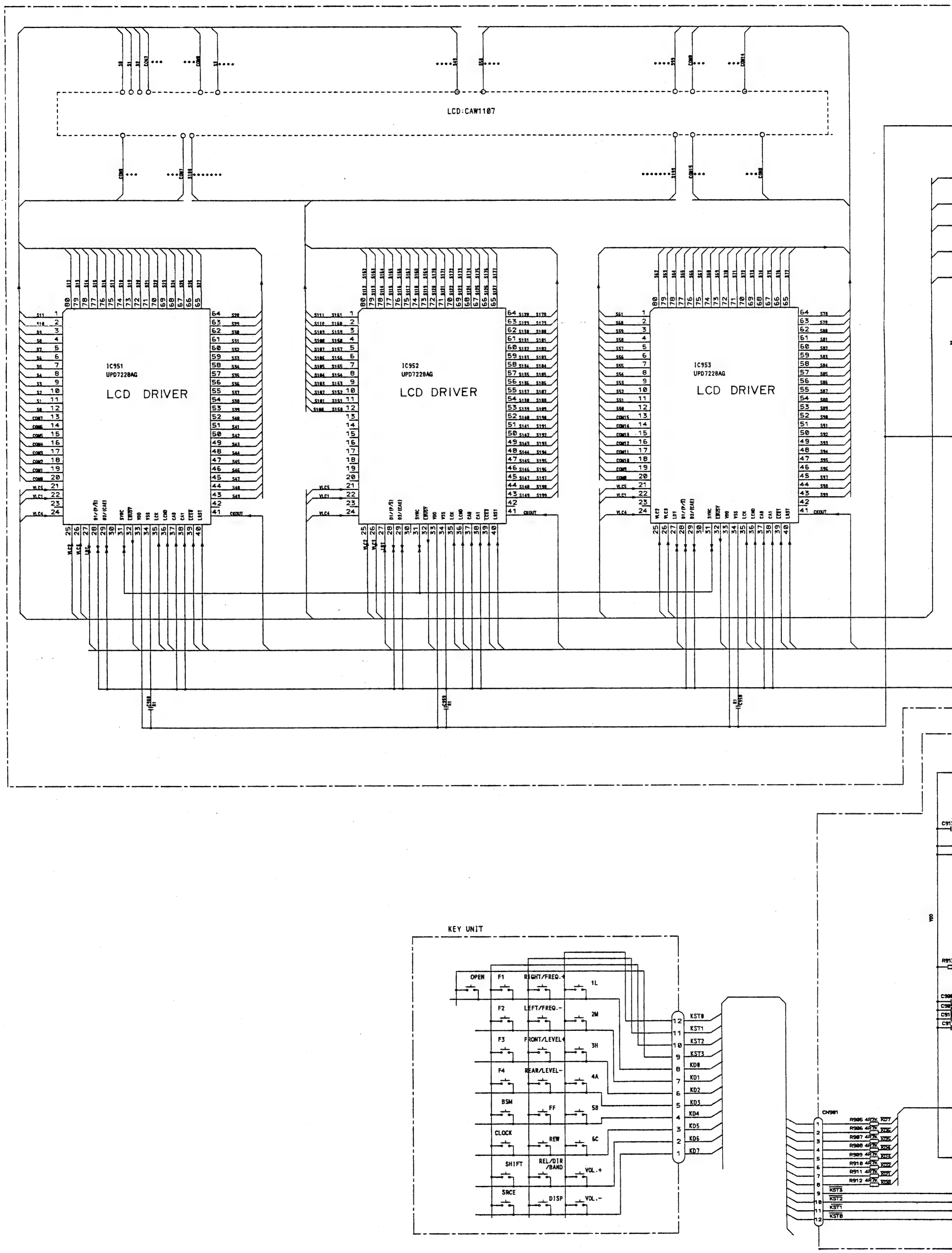

10. CONNECTION DIAGRAM (2)

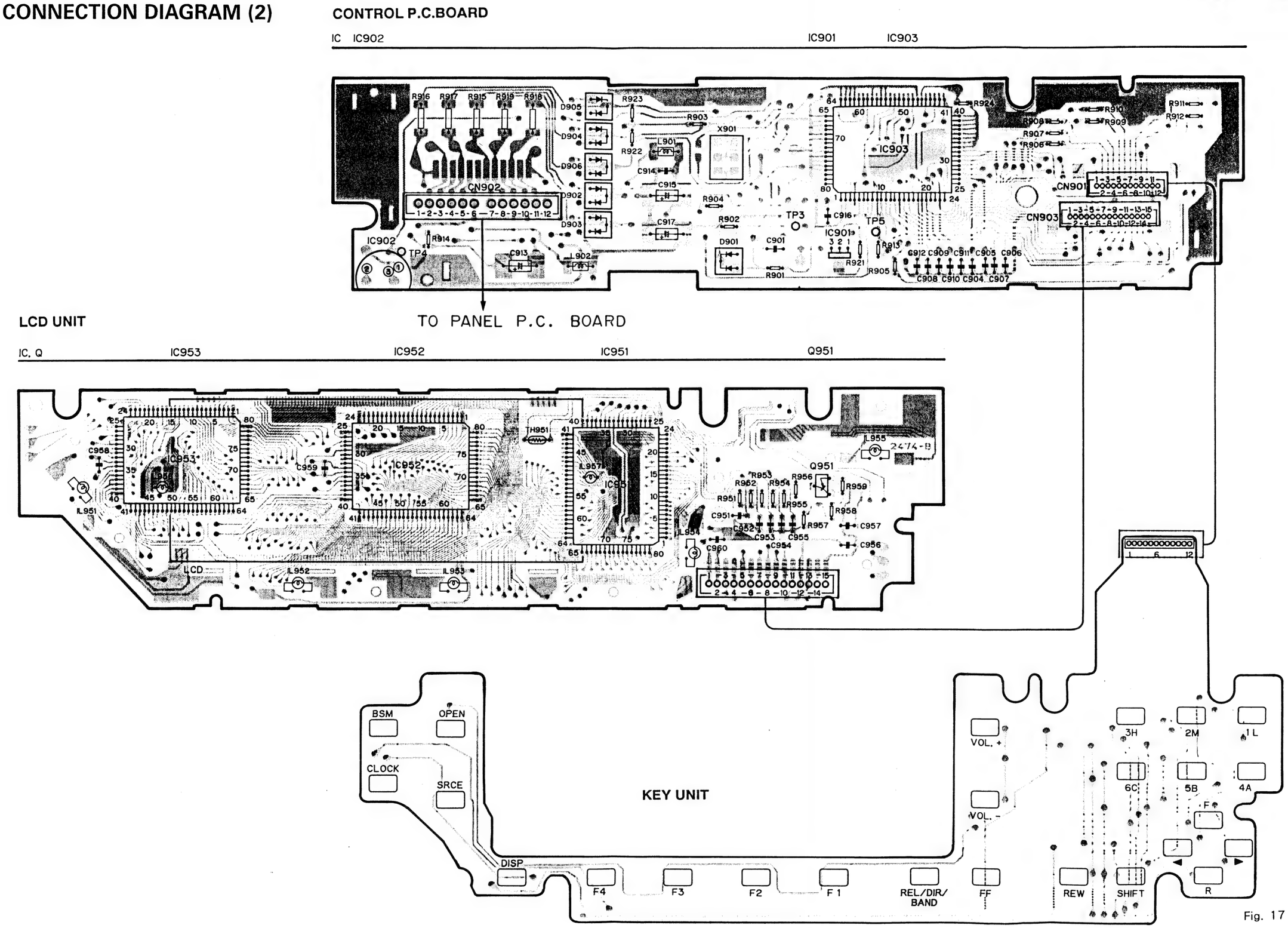

Fig. 17

11. SCHEMATIC CIRCUIT DIAGRAM (3)

● DAC Unit

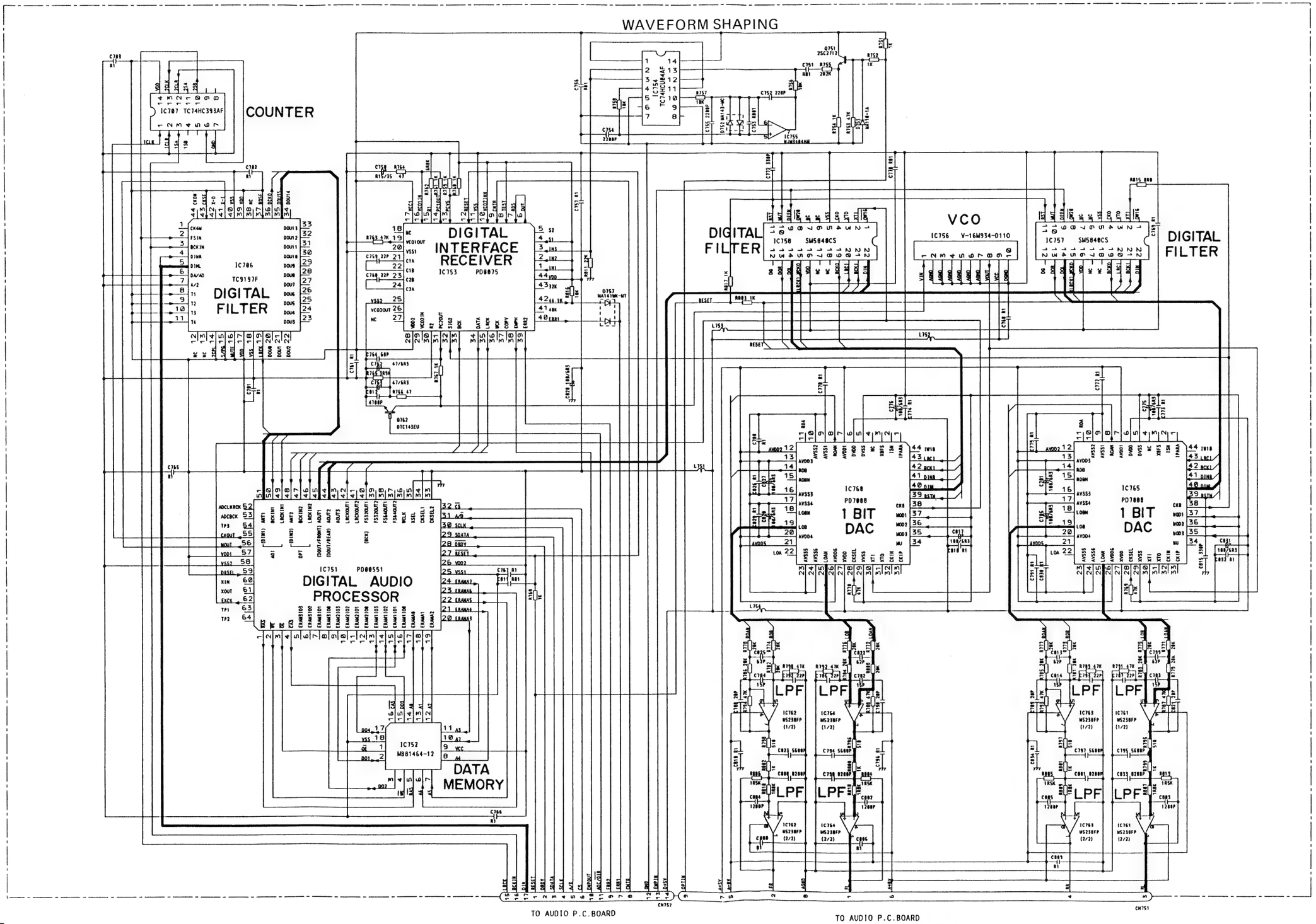

Fig. 18

12. CONNECTION DIAGRAM (3)

● DAC Unit

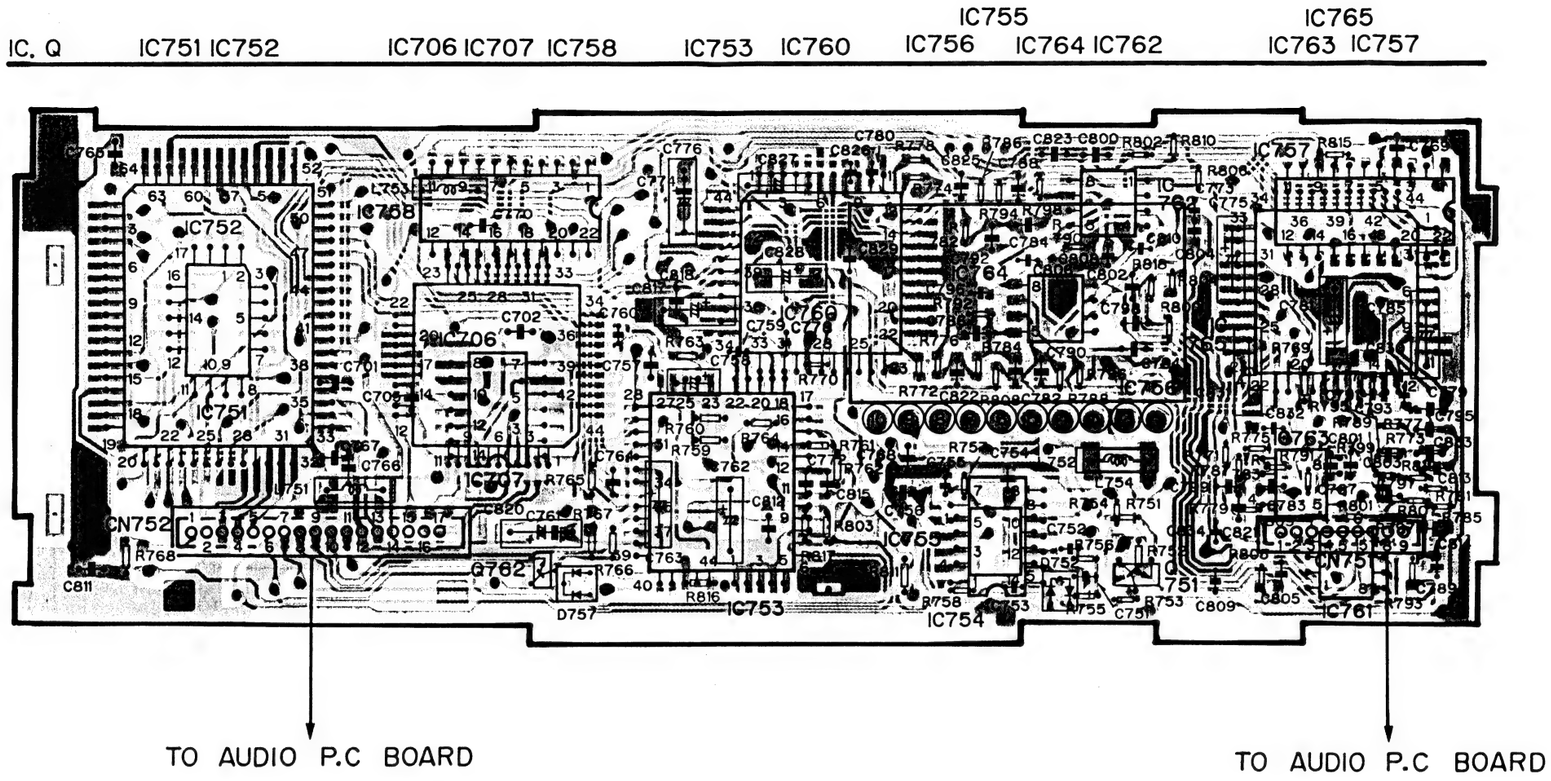

Fig. 19

13. SCHEMATIC CIRCUIT DIAGRAM (4)

● **EVR P.C.Board**

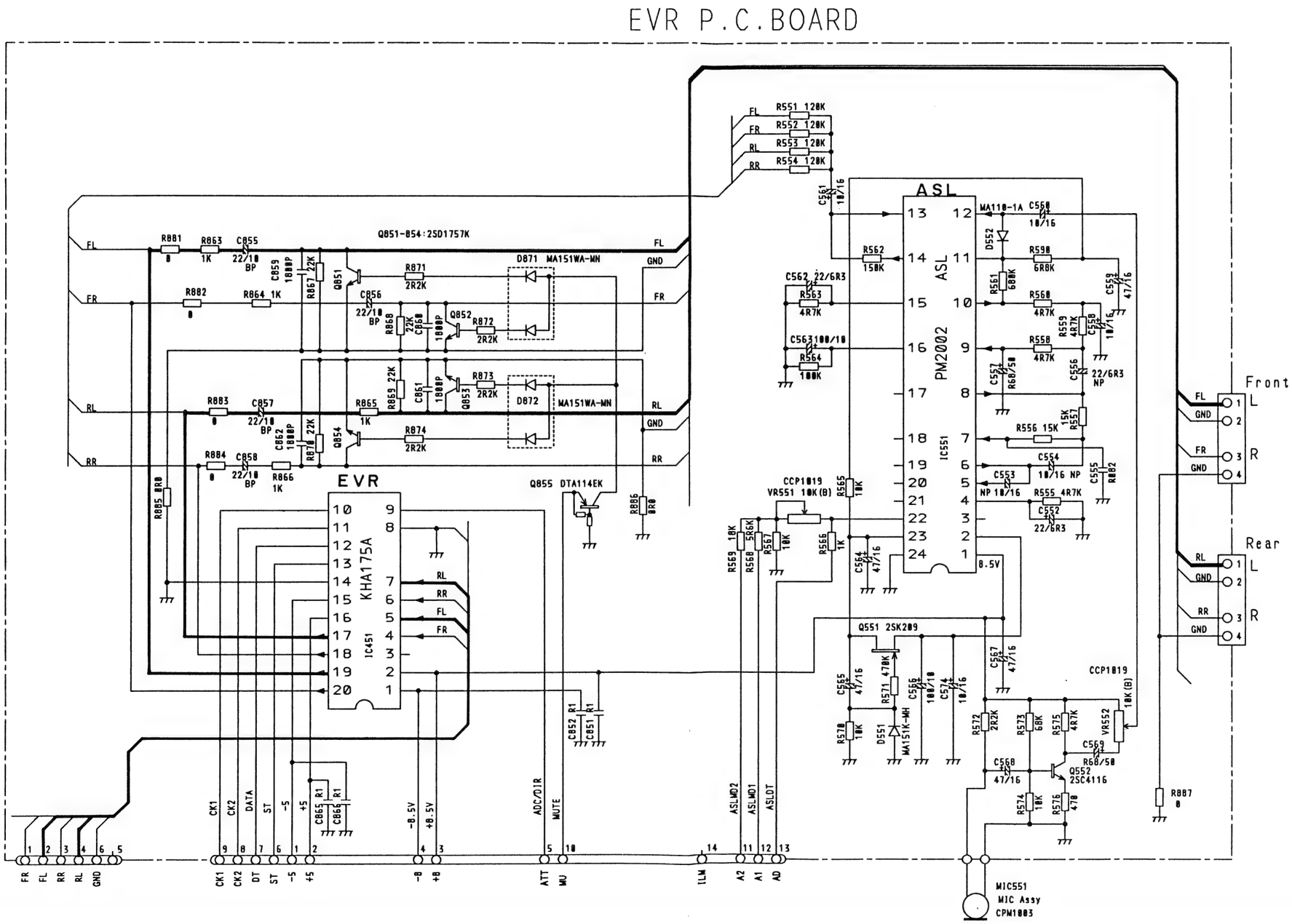

Fig. 20

14. CONNECTION DIAGRAM (4)

● EVR P.C. Board

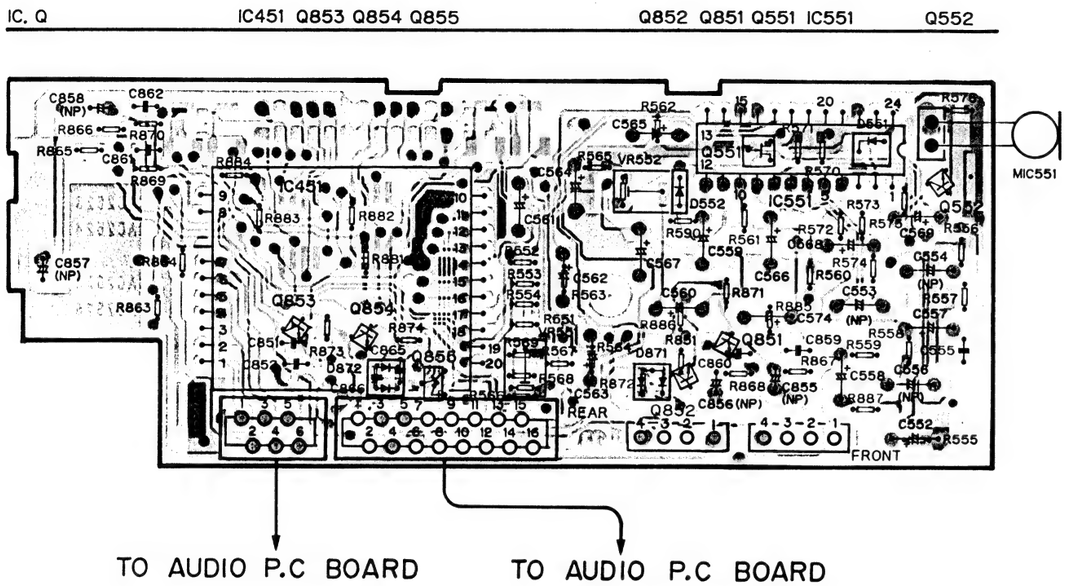

15. CONNECTION DIAGRAM (5)

● Cassette Mechanism Assy

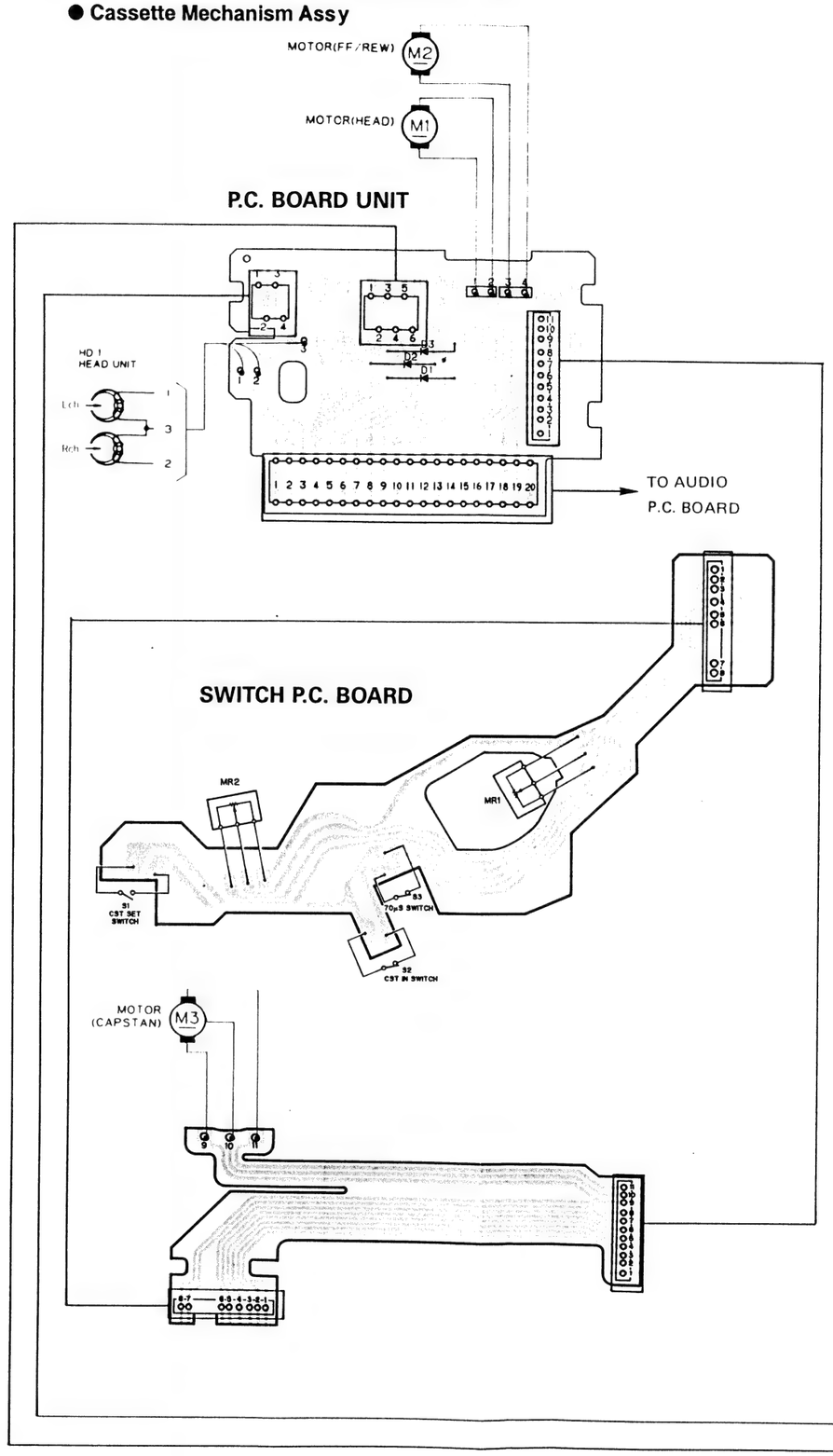

SENSE P.C. B

Fig. 21

15. CONNECTION DIAGRAM (5)

● Cassette Mechanism Assy

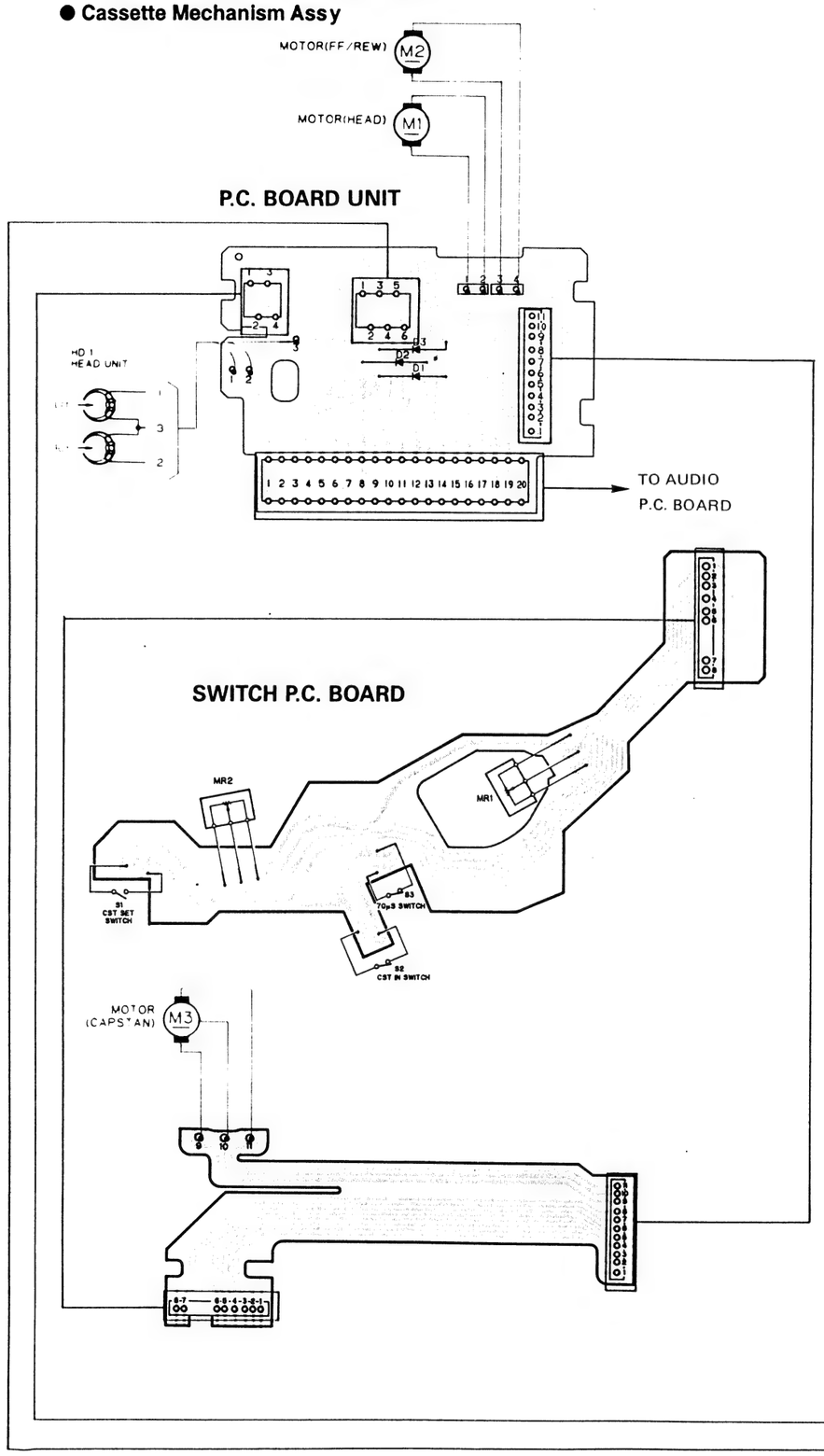

Fig. 21

16. SCHEMATIC CIRCUIT DIAGRAM (5)

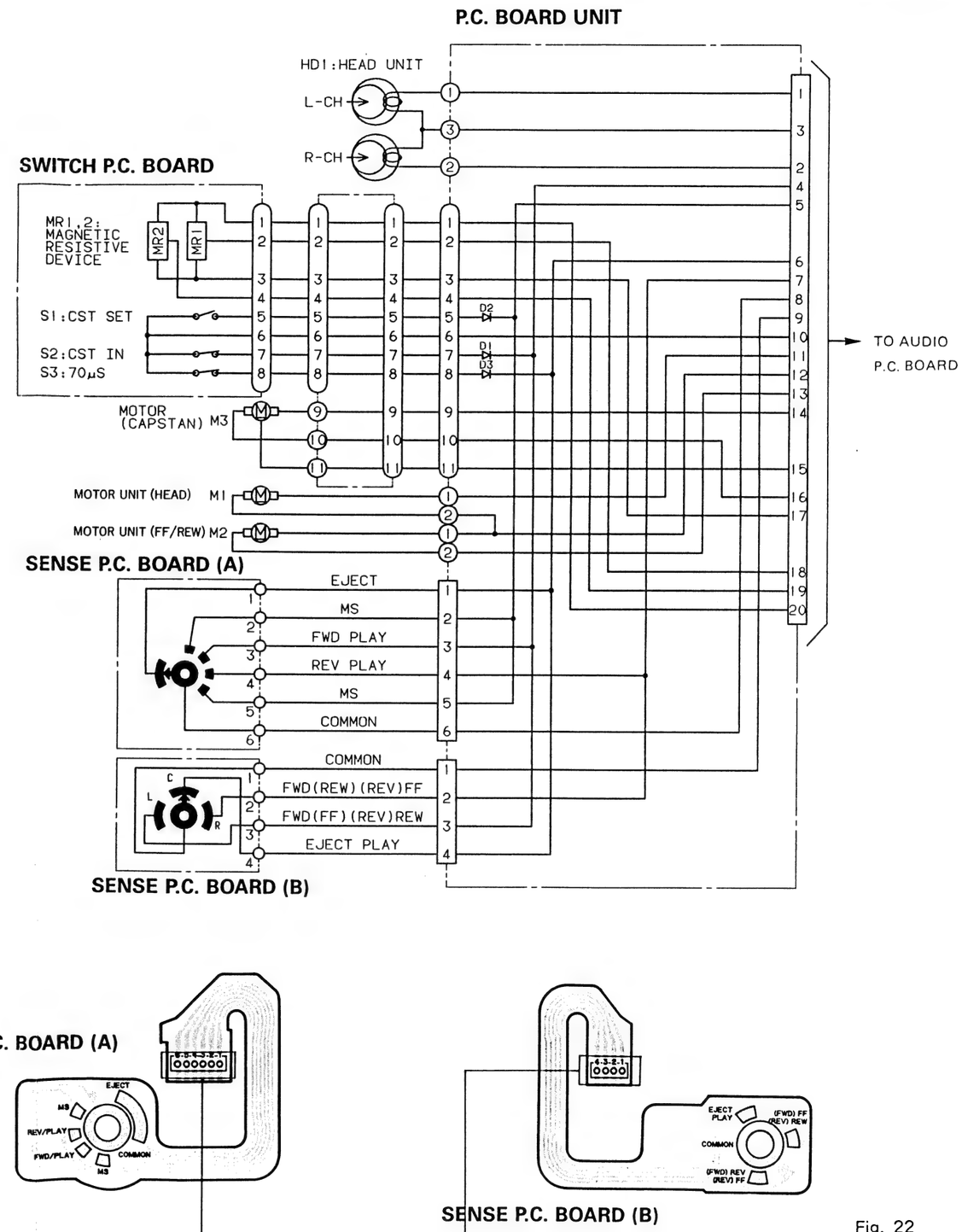

Fig. 22

17. CHASSIS EXPLODED VIEW

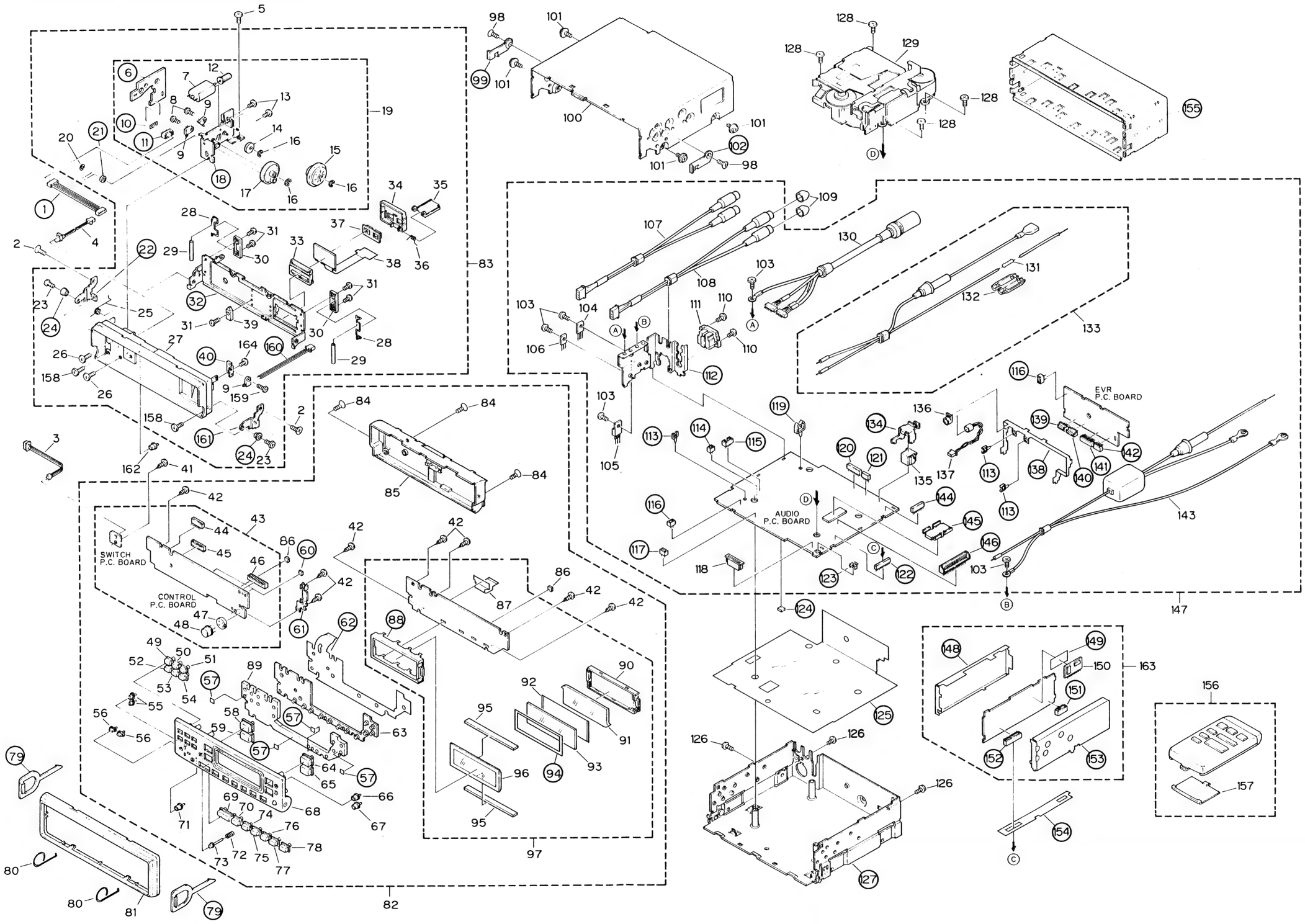

Fig. 23

NOTE:
- *Parts whose parts numbers are omitted are subject to being not supplied.*
- *Parts marked by "◉" are not always kept in stock. Their delivery time may be longer than usual or they may be unavailable.*

A

● Parts List

Mark	No.	Description	Part No.	Mark	No.	Description	Part No.
	1	Connector			41	Screw	BPZ20P050FMC
	2	Screw	CMZ30P050FMC		42	Screw	BPZ20P080FMC
	3	Cord	CDE2918	◉	43	Control Unit	CWM2379
	4	Lamp	CEL1148		44	Connector	CKS1950
	5	Screw	BMZ30P050FMC		45	Connector	CKS1953
	6	P.C.Board			46	Plug	CKS1663
	7	Motor	CXM1024		47	Spacer	CNM2853
	8	Screw	BMZ20P050FMC		48	IC	BX-1393
	9	Switch	CSN1012		49	Button(1L)	CAC2623
	10	Spacer			50	Button(2M)	CAC2624
	11	Plug			51	Button(3H)	CAC2625
	12	Gear	CNV2389		52	Button(4A)	CAC2626
	13	Screw	PMZ20P030FMC		53	Button(5B)	CAC2627
	14	Gear	CNV2458		54	Button(6C)	CAC2628
	15	Gear Unit	CXA3406		55	Button(|)	CAC2629
	16	Washer	YE20FUC		56	Button(—)	CAC2630
	17	Gear Unit	CXA3407		57	Spacer	
	18	Holder Unit			58	Button(+)	CAC2631
	19	Drive Assy	CXA3408		59	Button(−)	CAC2632
	20	Washer	CBF1037		60	Spacer	
	21	Spacer			61	Holder	
	22	Holder			62	P.C.Board	
	23	Screw	CBA1143		63	Rubber	CNV2549
	24	Shaft			64	Button(Ej)	CAC2650
	25	Spring	CBH1398		65	Button(SRCE)	CAC2641
	26	Screw	CBA1166		66	Button(B)	CAC2603
	27	Panel Unit	CXA3735		67	Button(↵)	CAC2604
	28	Spring	CBH1399		68	Grille Unit(US)	CXA3737
	29	Roller	CLA1706			Grille Unit(ES)	CXA3738
	30	Holder	CNV2141		69	Button(+−)	CAC2633
	31	Screw	CBA1082		70	Button(◀ ▶)	CAC2634
	32	Holder Unit			71	Button(↵)	CAC2557
	33	Socket	CKS2016		72	Spring	CBH1376
	34	Housing	CNV2558		73	Button(RESET)	CAC2646
	35	Cover	CNV2557		74	Button(F1)	CAC2635
	36	Spring	CBH1217		75	Button(F2)	CAC2636
	37	Rubber	CNV2569		76	Button(F3)	CAC2637
	38	P.C.Board	CNP2456		77	Button(F4)	CAC2638
	39	Guide	CNV2559		78	Button(DISP)	CAC2550
	40	Holder			79	Holder	

B

C

D

Mark	No.	Description	Part No.
	80	Spring	CBH-865
	81	Panel	CNS2165
◉	82	Grille Assy(US)	CXA3719
◉		Grille Assy(ES)	CXA3724
◉	83	Panel Assy	CXA3717
	84	Screw	CBA1172
	85	Cover Unit	CXA3742
	86	Cushion	CNN-412
	87	P.C.Board	CNP2457
	88	Holder	
	89	Lens	CNV2556
	90	Housing	CNV2597
	91	Lens	CNV2701
	92	Plate	CNM3016
	93	LCD	CAW1108
	94	Spacer	
	95	Connector	CNV2560
	96	LCD	CAW1107
◉	97	LCD Unit	CWM2378
	98	Screw	CMZ40P060FMC
	99	Holder	
	100	Case	CNB1370
	101	Screw	PMS30P050FZK
	102	Holder	
	103	Screw	BMZ30P060FMC
	104	IC	AN6540
	105	IC	NJM78M05A
	106	Transistor	2SD1684
	107	Connector(FRONT)	CDE3200
	108	Connector(REAR)	CDE3199
	109	Cap	CNV2680
	110	Screw	BMZ20P060FMC
	111	Connector	CKS1156
	112	Holder	
	113	Clamper	
	114	Plug	
	115	Plug	
	116	Plug	
	117	Connector	
	118	Connector	CKS1567
	119	Clamper	
	120	Plug	
	121	Connector	
	122	Connector	
	123	Holder	
	124	Cushion	
	125	Insulator	
	126	Screw	BMZ30P050FMC
	127	Chassis Unit	
	128	Screw	BMZ26P050FMC
◉	129	Cassette Mechanism Assy	CXK1605
	130	DIN Connector Cord	CDE2923
	131	Resistor	RS1/2P102JL
	132	Cap	CNS1472
	133	Cord Assy	CDE3051
	134	Holder	
	135	Connector	CKS2014
	136	Holder	CNV2196
	137	MIC Assy	CPM1003
	138	Holder	
	139	Plug	
	140	Plug	
	141	Plug	
	142	Plug	
	143	Cord Assy	CDE3048
	144	Connector	
	145	Heat Sink	
	146	Plug	
◉	147	Audio Unit	CWM2381
	148	Shield	
	149	Insulator	
	150	IC	V-16M934-D110
	151	Connector	
	152	Connector	
	153	Holder	
	154	Insulator	
	155	Holder	
	156	Remote Control Assy(US)	CXA3731
		Remote Control Assy(ES)	CXA3730
	157	Cover	CNS1962
	158	Screw	BMZ26P040FZK
	159	Screw	PMZ20P050FMC
	160	Connector	
	161	Holder	
	162	Button	CAC2694
◉	163	DAC Unit	CWM2377
	164	Screw	BPZ20P040FMC

18. CASSETTE MECHANISM ASSY EXPLODED VIEW

● Parts List

Mark No.	Description	Part No.
1	Screw (M1.4×1.4)	HBA-147
2	Screw	BMZ20P040FMC
3	Bush	CLB-663
4	Spring	CBE1023
5	Spring	CBH-867
6	Spring	CBH-837
7	Arm	CNC2373
8	Holder Unit	CXA3629
9	Gear Unit	CXA2088
10	Washer	CBF1026
11	Gear	CNY-271
12	Washer	CBF-126
13	Spring	CBH-835
14	E Type Washer	CBG1003
15	Spring	CBH1277
16	Pinch Roller Unit	CXA2608
17	Spring	CBH1197
18	E Type Washer	YE25FUC
19	Arm	CNV1254
20	Washer	CBF1022
21	Collar	CNW-932
22	Spring	CBH-827
23	Reel Unit	CXA2089
24	Spring	CBH-868
25	Bracket Unit	CXA1481
26	F/R Gear	CNW-944
27	Screw	CBA1106
28	Switch (70μS, CST IN)	CSN1003
29	Screw (M1.7×5.5)	CBA1025
30	P.C.Board	CNP1223
31	Switch (CST SET)	CSN-089
32	Screw (M1.7×3)	CBA-186
33	Magnetic Resistive Device	DM-106B
34	Washer	CBF-046
35	Spring	CBH-887
36	Spring	CBH-886
37	Gear	CNV1075
38	Screw (M2×5)	CBA1054
39	Arm Unit	CXD-389
40	Arm	CNG-618
41	Washer	HBF-179
42	Lever	CNV1257
43	Spring	CBH1196
44	Motor (Capstan)	CXM1055
45	Chassis Unit	
46	Screw	PMS26P025FMC
47	Spring	CBH-830
48	Screw (M2×2.5)	HBA-175
49	Spacer	
50	Spring	CBL1050
51	Washer	CBF1025
52	·····	
53	·····	
54	·····	
55	Screw	BMZ20P025FMC
56	Gear	CNV1616
57	Collar	CLA1238
58	Flywheel	CNR1194
59	Belt	CNT1046
60	Insulator	
61	·····	
62	Cover	
63	Screw	BMZ20P030FMC
64	Screw (M1.7×3)	CBA1125
65	Holder	
66	Screw (M2×25)	CBA-165
67	Guide	
68	Spacer	
69	·····	
70	Motor Unit (FF/REW, Head Position)	CXA3596
71	Screw	HBA-174
72	Bracket Unit	
73	Pinch Roller Unit	CXA2609
74	Screw (M2×2.5)	CBA1037
75	Pulley	CNV1255
76	Belt	CNT1047
77	·····	
78	·····	
79	Pulley	CNV1256
80	Screw (M2×5)	CBA1054

Mark	No.	Description	Part No.
	81	Bracket Unit	
	82	Cover	
	83	Screw(M1.4×8)	CBA1055
	84	Spring	CBE-114
	85	Azimuth Rubber	CNY-134
	86	Head Unit	CXA3096
	87	Spring	CBH-829
	88	Gear	CNW-939
	89	E Type Washer	YE12FUC
	90	Gear	CNV1262
	91	Holder Assy	CXA1546
	92	Spring	CBH1276
	93	Arm	CNV1495
	94	E Type Washer	YE15FUC
	95	P.C.Board	CNP1227
	96	P.C.Board	CNP1738
	97	P.C.Board	
	98	Connector(6P)	CKS1075
	99	Connector(4P)	CKS1073
	100	·····	
	101	Arm	CNH-004
	102	Holder Assy	CXA1548
	103	Screw(M2×2)	HBA-209
	104	Connector(20P)	CKS-678
	105	Screw(M2×2×3)	CBA1022
	106	Diode	1S1555
	107	P.C.Board	CNP2110
	108	Arm	CNV1253
	109	Screw(M2×7)	CBA1060
	110	Screw(M2×4)	CBA1015
	111	Screw(M2×2.5)	CBA1041

A

B

C

D

● **Cassette Mechanism Assy**

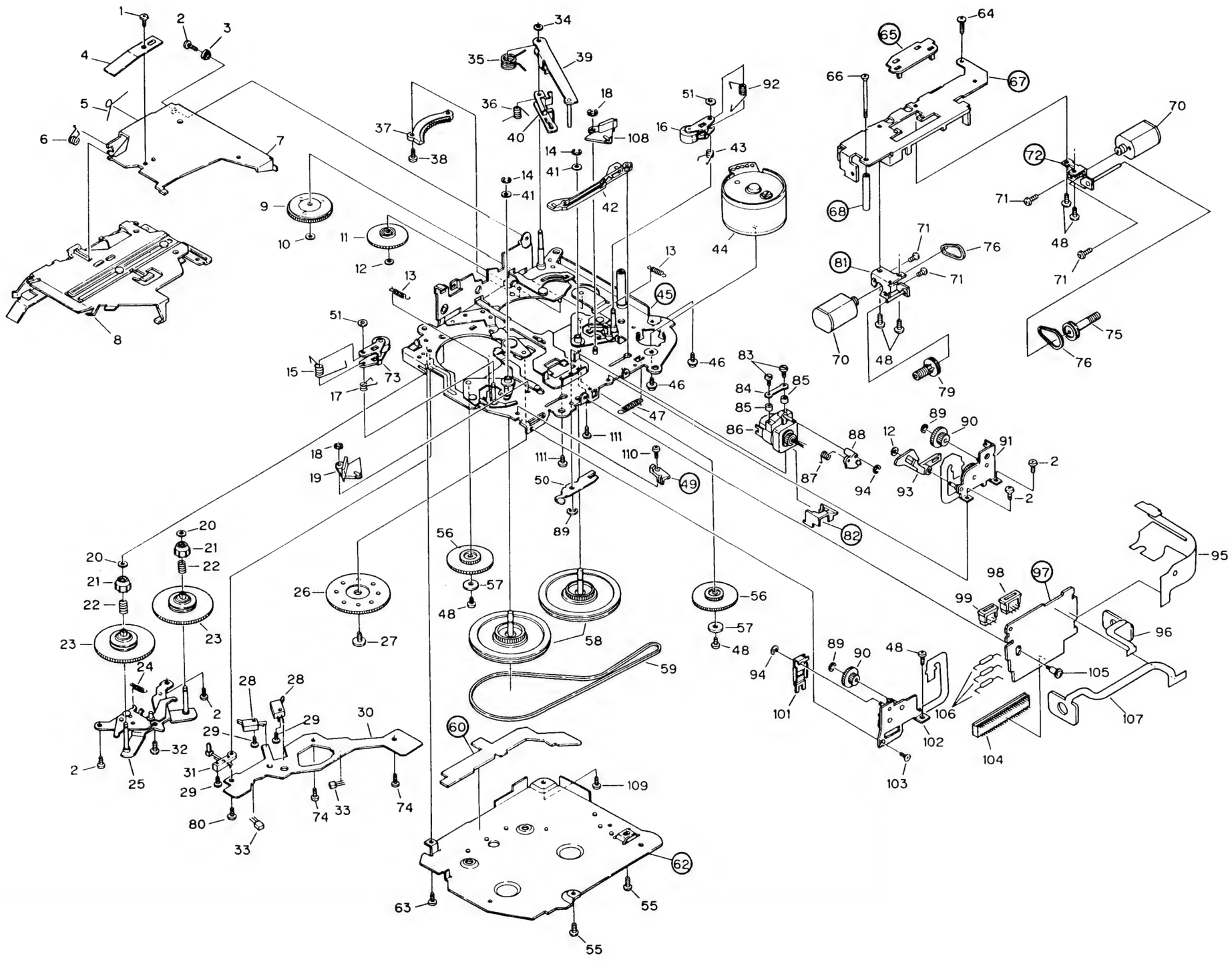

Fig. 24

19. PACKING METHOD

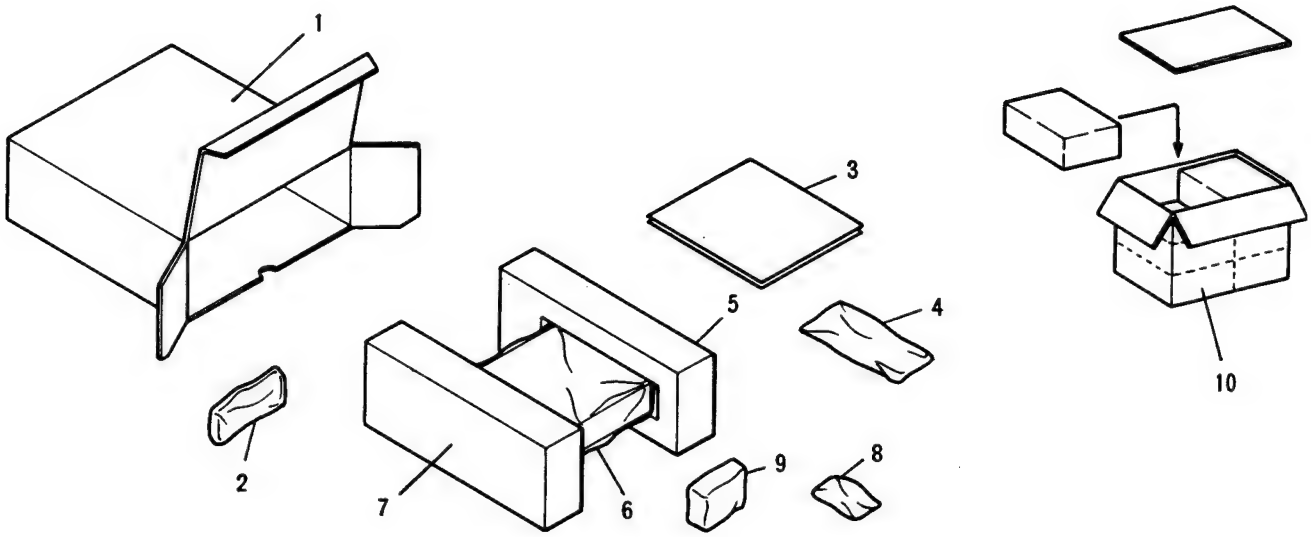

Fig. 25

Mark No.	Description	Part No.	Mark No.	Description	Part No.
1	Carton	CHG1874	4-6	Screw Assy	
2	Case	CNS2055	4-6-1	Screw(×4)	BMZ40P080FMC
3-1	Card(US)		4-6-2	Screw(×4)	BMZ50P080FMC
3-2	Owner's Manual(US) (English)	CRB1188	4-6-3	Screw(×1)	CBA-102
			4-6-4	Nut(×2)	NF50FMC
			4-6-5	Screw (×1)	CBA1002
	Owner's Manual(ES) (English, French, Spanish, Arabic)	CRD1408	5	Styrofoam(R)	CHP1360
			6	Cover	CEG1092
3-3	Caution Card		7	Styrofoam(L)	CHP1361
4	Accessory Assy	CEA1615	8	Remote Control Assy	CXA3731
			9	Accessory Assy	CEA1473
4-1	Screw(×1)	BPZ20P040FZK			
4-2	Spring(×2)	CBH-865	9-1	Battery	
4-3	Holder		9-2	Fastener	CNM1716
4-4	Strap	CNF-111	9-3	Fastener	CNM1717
4-5	Bush	CNV1009	10	Contain Box	CHL1874

20. ELECTRICAL PARTS LIST

NOTE:

- *Parts whose parts numbers are omitted are subject to being not supplied.*
- *The part numbers shown below indicate chip components.*
  Chip Resistor
  RS1/8S□□□J, RS1/10S□□□J
  Chip Capacitor (except for CQS.....)
  CKS....., CCS....., CSZS.....

MISCELLANEOUS

Mark	Circuit Symbol & No.	Part Name	Part No.
IC	756		V-16M934-D110
IC	706		TC9197F
IC	707		TC74HC393AF
IC	751		PD00551
IC	752		MB81464-12
IC	753		PD0075
IC	754		TC74HCU04AF
IC	755		NJM3404AM
IC	757 758		SM5840CS
IC	760 765		PD7008
IC	761 762 763 764		M5238FP
Q	751	Chip Transistor	2SC2712
Q	762	Chip Transistor	DTC143EU-23
D	751	Chip Diode	MA110-1A
D	752	Chip Diode	MA143-MC
D	757	Chip Diode	MA141WK-MT
L	751 752 753 754	Inductor	CTF1102

RESISTORS

Mark	Circuit Symbol & No.	Part Name	Part No.
R	751 754		RS1/16S102J
R	752		RS1/10S102J
R	753		RS1/16S473J
R	755		RS1/16S222J
R	756		RS1/16S103J
R	757 758		RS1/16S103J
R	759 760 761 767		RS1/10S102J
R	762		RS1/10S682J
R	763		RS1/16S473J
R	764		RS1/16S470J
R	765		RS1/10S392J
R	766		RS1/10S470J
R	768		RS1/10S102J
R	769		RS1/10S473J
R	770		RS1/16S473J
R	771 773 775 777 779 781 783 785		RS1/16S203J
R	772 774 776 778 782 784 786 808		RS1/16S203J
R	787 788 789 790 791 792 793 794		RS1/16S473J
R	795 796 797 798		RS1/16S511J
R	799 800 801 802		RS1/16S102J
R	803 817		RS1/10S102J
R	804 805 806		RS1/16S152J
R	807 809 810 818		RS1/16S182J
R	811		RS1/10S223J
R	815		RS1/10S0R0J
R	816		RS1/10S103J
R	819		RS1/16S152J

CAPACITORS

Mark	Circuit Symbol & No.	Part Name	Part No.
C	701		CKSQYB104K25
C	702 703		CKSQYB104K25
C	751 756		CKSRYB103K25
C	752		CCSRCH221J50
C	753		CKSRYB102K50
C	754		CKSQYB222K50
C	755		CKSRYB222K50
C	757 761		CKSQYB104K25
C	758		CSZSR15M35
C	759 760		CCSRCH220J50
C	762 763		CSZST470M6R3
C	764		CCSQCH680J50
C	765 767		CKSQYB104K25
C	766		CKSQYB104K25
C	768		CKSQYB104K25
C	769 779		CKSQYB104K25
C	770		CKSQYB103K50
C	772 815		CKSQYB331K50
C	773 777 791 830		CKSRYF104Z25
C	774 818		CKSQYB104K25
C	775 781 785 831	100μF/6.3V	CCH1067
C	776 817 827 828	100μF/6.3V	CCH1067
C	778 780 826 829		CKSRYF104Z25
C	782 784		CCSQCH150J50
C	783 814		CCSQCH150J50
C	786 792		CCSQCH220J50
C	787 793		CCSQCH220J50
C	788 790		CCSQCH200J50
C	789		CCSQCH200J50
C	794 797 823		CKSQYB562K50

Mark	Circuit Symbol & No.	Part Name	Part No.
C	795		CKSQYB562K50
C	796 806 808 810		CKSRYF104Z25
C	798 800 801		CKSQYB822K50
C	799 813		CCSQCH620J50
C	802 804		CCSQCH122J50
C	803		CCSQCH122J50
C	805		CCSQCH122J50
C	809 832		CKSRYF104Z25
C	811		CKSQYB103K50
C	812		CKSQYB472K50
C	820	100μF/6.3V	CCH1067
C	821		CCSQCH200J50
C	822 825		CCSQCH620J50
C	833		CKSQYB822K50
C	834		CKSQYB104K25

Unit Number :
Unit Name : LCD Unit

MISCELLANEOUS

Mark	Circuit Symbol & No.	Part Name	Part No.
IC	951 952 953		UPD7228AG
Q	951	Chip Transistor	2SA1162
TH	951	Thermistor	DTN-T204D154K
IL	951 952 953 954 955	Lamp 14V 40mA	CEL1150
IL	956 957	Lamp 8V 60mA	CEL1181
		LCD	CAW1107
		LCD	CAW1108

RESISTORS

Mark	Circuit Symbol & No.	Part Name	Part No.
R	951 952 953 954 955		RS1/10S102J
R	956		RS1/10S102J
R	957		RS1/10S224J
R	958		RS1/10S104J
R	959		RS1/10S333J

CAPACITORS

Mark	Circuit Symbol & No.	Part Name	Part No.
C	951 952 953 954 955		CKSQYB473K25
C	956 957 958 959 960		CKSQYB104K25

Unit Number :
Unit Name : Control P.C.Board

MISCELLANEOUS

Mark	Circuit Symbol & No.	Part Name	Part No.
IC	901		S-80743AN-D7
IC	902		BX-1393
IC	903		PD4274A
D	901	Chip Diode	MA151WK-MT
D	902 903 904 905 906	Chip Diode	HSM123
L	901 902	Inductor	CTF1104
X	901		CSS1071

RESISTORS

Mark	Circuit Symbol & No.	Part Name	Part No.
R	901 902		RS1/10S103J
R	903 904 922 923		RS1/10S473J
R	905 906 907 908 909 910 911 912		RS1/10S472J
R	913		RS1/10S103J
R	914		RS1/10S220J
R	915 916 917 918 919		RS1/2S222J
R	921 924		RS1/10S473J

CAPACITORS

Mark	Circuit Symbol & No.	Part Name	Part No.
C	901		CKSQYB103K50
C	904 905 906 907 908 909 910 911 912		CKSQYB471K50
C	913 915 917		CSZST220M16
C	914 916		CKSQYB473K25

Unit Number :
Unit Name : Switch P.C.Board

Mark	Circuit Symbol & No.	Part Name	Part No.
S	601	Switch(RESET)	CSG1034

Unit Number :
Unit Name : Audio Unit

Audio Unit
Consists of • Audio P.C.Board • EVR P.C.Board

MISCELLANEOUS

Mark	Circuit Symbol & No.	Part Name	Part No.
IC	251		CWV1014
IC	451		KHA175A
IC	551		PM2002
IC	601		PD4273A
IC	602		MSM82C55A-2GS
IC	603		CXK5816M-15L
IC	604		PDG062B
IC	605		TC74HC245AF
IC	606 607		TC4S81F
IC	608		S-80743AN-D7
IC	651		PA3022
IC	701 702		UPC4570G
IC	703		TD6726N
IC	704		UPC4570G
IC	951		KHAA03
IC	952		NJM79L05UA
IC	953		NJM78M05A
IC	954		AN6540
IC	955		NJM78L05UA
IC	956		M54546AL
Q	301 302	Chip Transistor	DTC343TK
Q	303	Chip Transistor	DTA114EK
Q	304	Chip Transistor	2SC2712
Q	501 509 510	Chip Transistor	DTC114TK
Q	502 504		2SB1243

Mark	Circuit Symbol & No.										Part Name	Part No.
Q	503	961									Chip Transistor	2SC3295
Q	505											UN4122
Q	506	955									Chip Transistor	IMH4
Q	508	957									Chip Transistor	DTA114EK
Q	511	703									Chip Transistor	DTA114EK
Q	512										Chip Transistor	2SC2712
Q	513	515	952								Chip Transistor	IMD2
Q	551										Chip Transistor	2SK209
Q	552										Chip Transistor	2SC4116
Q	601										Chip Transistor	DTC114TK
Q	602										Chip Transistor	DTA114EK
Q	603	958	963								Chip Transistor	DTC114TK
Q	604										Chip Transistor	2SA1162
Q	605										Chip Transistor	DTA114TK-94
Q	606	608									Chip Transistor	2SC3295
Q	607	609									Chip Transistor	DTC114TK
Q	610										Chip Transistor	2SD601A
Q	651	652									Chip Transistor	2SC2712
Q	701	702									Chip Transistor	DTC343TK
Q	851	853	854								Chip Transistor	2SD1757K
Q	852										Chip Transistor	2SD1757K
Q	855										Chip Transistor	DTA114EK
Q	951											2SD1684
Q	954											2SB1238
Q	959											2SD2037
Q	960										Chip Transistor	2SA1036K
Q	962											2SD1864
D	251										Chip Diode	MA151A-MA
D	501										Chip Diode	MA8075H
D	502	503										ERA15-02VH
D	504										Chip Diode	MA8068H
D	505										Chip Diode	MA8068L
D	506	955										ERA15-02VH
D	507	510	613	956							Chip Diode	MA151WK-MT
D	509	551									Chip Diode	MA151K-MH
D	552	601	602	604							Chip Diode	MA110-1A
D	603										Chip Diode	MA151A-MA
D	605	609									Chip Diode	MA110-1A
D	610										Chip Diode	MA151A-MA
D	611										Chip Diode	MA151WA-MH
D	616	651									Chip Diode	MA151A-MA
D	871	872									Chip Diode	MA151WA-MH
D	951										Chip Diode	MA8100L
D	953	954	957								Chip Diode	MA8056H
D	958											ERC05-10B
L	601	602	603	604							Ferri-Inductor	LAU4R7K
L	701	755									Inductor	CTF1102
L	702										Inductor	LAUR22M
L	954										Inductor	CTF1104
L	955										Inductor	CTF1102
TC	601										Trimmer	CCG1002
IB	601											CWW1302
IB	602											CWW1147
IB	603											CWW1185
IB	604											CWW1128
IB	605											CWW1292
IB	606											CWW1291
X	601										Crystal Resonator	CSS1023
X	701										Crystal Resonator	CSS1063
VR	251	252									Semi-fixed 10kΩ (B)	CCP1019
VR	551	552									Semi-fixed 10kΩ (B)	CCP1019
VR	601										Semi-fixed 1kΩ (B)	CCP1013
VR	701	702	705	706							Semi-fixed 470Ω (B)	VRTB4VS471
VR	703	704									Semi-fixed 1kΩ (B)	VRTB4VS102
MIC	551										Microphone Assy	CPM1003
Z	601										Surge Absorber	ERZ-C07DK220
BZ	601										Buzzer	CPV1010
IL	601										Lamp 14V 40mA	CEL1159
EF	951										EMI Filter	CCG1006
EF	952	954									EMI Filter	CCG1003

RESISTORS

Mark	Circuit Symbol & No.										Part Name	Part No.
R	251	252										RS1/10S183J
R	253											RS1/10S393J
R	301	302										RS1/10S472J
R	303	304	619									RS1/10S473J
R	305	306										RS1/10S473J
R	307											RS1/10S103J
R	451	452	453	454	960							RS1/10S102J
R	501	503	520	608	954	964						RS1/10S473J
R	502	681										RS1/2S681J
R	504	513	514	515	519							RS1/8S222J
R	505	507	508									RS1/10S103J
R	506											RS1/10S122J
R	509	636	963									RS1/10S104J
R	516	610	639	715	716	966	967					RS1/10S102J
R	517											RS1/10S222J
R	521	522	523	603	604							RS1/10S472J
R	524	525										RS1/10S473J
R	551	552	553	554								RS1/10S124J
R	555											RS1/10S472J
R	556	557										RS1/10S153J
R	558	559	563									RS1/10S472J
R	560											RS1/10S472J
R	561											RS1/10S684J
R	562											RS1/10S154J
R	564											RS1/10S104J
R	565	567	570	574	614							RS1/10S103J
R	566											RS1/10S102J
R	568											RS1/10S562J
R	569											RS1/10S183J
R	571											RS1/10S474J
R	572											RS1/10S222J
R	573											RS1/10S683J
R	575											RS1/10S472J
R	576											RS1/10S471J
R	590											RS1/10S682J
R	601	602	611	635	637	641	678	679	682			RS1/10S473J
R	605	606	628									RS1/10S471J
R	607											RS1/10S474J
R	609											RS1/10S223J
R	612	685	686	687								RS1/10S474J
R	613	624	625	626								RS1/10S471J
R	615	643										RS1/10S103J
R	616	617	618	622	623							RS1/10S473J
R	621											RS1/10S182J
R	629	630	631	632	633	634	650	680				RS1/2S222J

Mark	Circuit Symbol & No.	Part Name	Part No.
R	638 640 642 644		RS1/10S472J
R	645 646 647 648 649		RS1/10S221J
R	651 652 653 654		RS1/10S222J
R	655 657		RS1/10S472J
R	656		RS1/10S562J
R	658		RS1/10S392J
R	659		RS1/10S684J
R	670 671 672 673		RS1/10S473J
R	675 677		RS1/10S473J
R	676		RS1/10S104J
R	684		RS1/10S104J
R	688		RS1/10S682J
R	689		RS1/10S103J
R	690		RS1/10S102J
R	691		RS1/10S473J
R	701 702		RS1/10S104J
R	703 704		RS1/10S203J
R	705 706		RS1/10S393J
R	707 708		RS1/10S124J
R	709 710 711 712 725 726 745		RS1/10S102J
R	713 714		RS1/10S102J
R	717 718 719 720 729 730		RS1/10S222J
R	721 722		RS1/10S221J
R	723 724		RS1/10S392J
R	727 728 731 732 733 734		RS1/10S223J
R	735 736 737 738		RS1/10S102J
R	739 740		RS1/10S152J
R	741 742		RS1/10S272J
R	743		RS1/10S123J
R	744		RS1/10S221J
R	747 748		RS1/10S224J
R	749 750		RS1/10S433J
R	751		RS1/10S221J
R	863		RS1/10S102J
R	864 865 866		RS1/10S102J
R	867 868 869 870		RS1/10S223J
R	871 873 874		RS1/10S222J
R	872		RS1/10S222J
R	881 882 883 884		RS1/10S0R0J
R	885 886 887		RS1/10S0R0J
R	951		RS1/8S2R2J
R	952		RS1/10S681J
R	953 965		RS1/8S222J
R	955		RS1/10S103J
R	957		RS1/10S472J
R	958 959		RS1/8S4R7J
R	961		RS1/10S222J
R	962		RS1/10S681J
R	968		RS1/10S102J

CAPACITORS

Mark	Circuit Symbol & No.	Part Name	Part No.
C	251 252		CCSQSL391J50
C	253 254	22μF/16V	CCH1102
C	255 256 303 304	4.7μF/35V	CCH1100
C	257		CEA101M10LS
C	258	10μF/16V	CCH1101
C	259		CKSQYB103K25
C	301 302	1μF/50V	CCH1099
C	305		CEA100M16LS2
C	306		CEA470M16LS
C	307		CEA4R7M35LS
C	501		CKSQYB103K25
C	502		CEA010M50LS2
C	503		CEA010M50LS2
C	552 562		CEA220M6R3LS
C	553 554		CEALNP100M16
C	555		CKSQYB823K25
C	556		CEALNP220M6R3
C	557 569		CEAR68M50LS2
C	558 560 561 574		CEA100M16LS2
C	559 564 565 567 568		CEA470M16LS
C	563 566		CEA101M10LS
C	601 610		CKSQYB473K25
C	602 963 970		CKSQYB473K25
C	603 604 966 968		CEA470M16LS
C	605		CCSQCH330J50
C	607 813 814		CKSQYB473K25
C	609		CKSQYB473K25
C	611		CEA2R2M50LS2
C	651		CKSQYB392K50
C	652		CEAR15M50LS2
C	653		CCSQCH330J50
C	654 655 656 657 658 659		CKSQYB473K25
C	660		CEAR68M50LS
C	661		CKSQYB473K25
C	662		CEA470M6R3LS
C	663		CEA470M6R3LS
C	664		CEA471M16L2
C	701 702		CCSQCH220J50
C	703 704		CKSQYB183K25
C	705 706		CKSQYB153K25
C	707 708	8200PF	CCG1016
C	709 710		CCSQSL561J50
C	711 712		CKSQYF104Z25
C	713 714		CCSQCH180J50
C	715 716		CCSSL102J50
C	717 718		CCSQCH271J50
C	719 720 721 722 730 732 736 741		CKSQYB473K25
C	723 724		CKSQYB103K25
C	727 728		CEALNP470M6R3
C	731		CEA220M16LS
C	733		CKSQYB103K25
C	734		CCSQCH100D50
C	735		CCSQCH020C50
C	737		CEA470M16LS
C	745 746	22μF/6.3V	CCH1097
C	812		CEA330M16LS
C	851 852 865 866		CKSQYB104K25
C	855 856 857 858	22μF/10V	CCH1098
C	859 860 861 862		CCSQSL182J50
C	951		CKSQYB473K25
C	952 958 972 975		CEA101M10LS
C	953 955		CEHAQ470M25
C	954		CEHAQ2R2M50
C	956		CEHAQ101M16
C	957		CSZSR3R3M16
C	959 961 962 964 965 967 969 978		CKSQYB473K25
C	960 971 977		CSZST220M16
C	973 974		CKSYB473K25
C	976	3300μF/16V	CCH1018
C	979		CSZST470M6R3
C	980 981		CCSQCH150J50
C	982		CCSQCH150J50

Unit Number :
Unit Name : Panel P.C.Board

Mark	Circuit Symbol & No.										Part Name	Part No.
D	614	615									LED	LN31GC6V

Unit Number :
Unit Name : Drive Assy

Mark	Circuit Symbol & No.										Part Name	Part No.
S	610	611									Switch(OPEN, CLOSE)	CSN1012
M	610										Motor	CXM1024

Unit Number :
Unit Name : Switch P.C.Board (Cassette Mechanism Assy)

Mark	Circuit Symbol & No.										Part Name	Part No.
S	1										Switch(CST SET)	CSN-089
S	2	3									Switch(CST IN, 70μs)	CSN1003
MR	1	2									Magnetic Resistive Device	DM-106B

Unit Number :
Unit Name : P.C.Board Unit

Mark	Circuit Symbol & No.										Part Name	Part No.
D	1	2	3									1S1555

MISCELLANEOUS

Mark	Circuit Symbol & No.										Part Name	Part No.
IL	602										Lamp 14v 40mA	CEL1148
HD	1										Head Unit	CXA3096
M	1	2									Motor Unit(Head, FF/REW)	CXA3596
M	3										Motor(CAPSTAN)	CXM1055
S	601										Switch(RESET)	CSG1034
S	602										Switch(CLOSE)	CSN1012

PIONEER
The Art of Entertainment

Service Manual

ORDER NO.
CRT1352

MULTI-CD/TUNER CONTROL DSP DECK

KEX-M900RDS EW

- This additional service manual is designed to be used together with Model KEX-M900/US Service Manual (CRT1335). Refer to it for finding parts numbers, etc. which are not shown in this manual.

CONTENTS

1. CHASSIS EXPLODED VIEW ····· 2
2. PACKING METHOD ····· 2
3. ELECTRICAL PARTS LIST ····· 3
4. SCHEMATIC CIRCUIT DIAGRAM ····· 6
5. CONNECTION DIAGRAM ····· 9

PIONEER ELECTRONIC CORPORATION 4-1, Meguro 1-Chome, Meguro-ku, Tokyo 153, Japan
PIONEER ELECTRONICS SERVICE INC. P.O. Box 1760, Long Beach, California 90801 U.S.A.
PIONEER ELECTRONICS OF CANADA, INC. 505 Cochrane Drive, Markham, Ontario L3R 8E3 Canada
PIONEER ELECTRONIC [EUROPE] N.V. Keetberglaan 1, 2740 Beveren, Belgium
PIONEER ELECTRONICS AUSTRALIA PTY. LTD. 178-184 Boundary Road, Braeside, Victoria 3195, Australia TEL: [03] 580-9911
© PIONEER ELECTRONIC CORPORATION 1991
FS FEB. 1991 Printed in Japan

1. CHASSIS EXPLODED VIEW

(Page 62)

NSP:Non spare part

		KEX-M900/US	KEX-M900RDS/EW	
Mark No.	Description	Part No.	Part No.	Note
66	Button	CAC2603	CAC2605	B →TA
67	Button	CAC2604	CAC2606	CLOCK→AF
68	Grille Unit	CXA3737	CXA3734	
◉ 82	Grille Assy	CXA3719	CXA3716	
127	Chassis Unit	NSP	NSP	
133	Cord Assy	CDE3051	CDE3141	
143	Cord Assy	CDE3048	CDE3071	
◉ 147	Audio Unit	CWM2381	CWM2376	
156	Remote Control Assy	CXA3731	CXA3730	

2. PACKING METHOD

(Page 70)

NSP:Non spare part

		KEX-M900/US	KEX-M900RDS/EW	
Mark No.	Description	Part No.	Part No.	Note
1	Carton	CHG1874	CHG1980	
3-1	Card	NSP	NSP	
3-2	Owner's Manual	CRB1188	CRD1406	
	Owner's Manual	----	CRD1407	
4	Accessory Assy	CEA1615	CEA1641	
4-6	Screw Assy	NSP	NSP	
5	Styrofoam (R)	CHP1360	CHP1400	
7	Styrofoam (L)	CHP1361	CHP1401	
8	Remote Control Assy	CXA3731	CXA3730	
10	Contain Box	CHL1874	NSP	

*Owner's Manual

Part No.	Language
CRD1406	English, French, German, Spanish
CRD1407	Swedish, Norwegian, Dutch, Italian, Finnish

5. CONNECTION DIAGRAM

IC, Q: Q604 | IC651 IC704 Q652 IC701 Q301 IC703 Q303 IC702 IC606 Q304 IC251 Q651 Q608 Q302 IC607 Q605 | IC602 Q606 | IC952 Q602 IC608 | Q511 IC955 IC604 | Q703 Q512 IC601 | Q702 Q509 Q510 IC603 | Q508 Q501 | Q701 Q962 Q607 | Q505 IC605 Q609 | Q954 Q504 Q610 | IC951 IC956 Q959 | Q503 Q502 Q961 | Q963 Q958 Q603 | Q960 Q964 Q957 | IC954 IC953 Q951

ADJ: VR252 VR251 | VR702 VR704 | VR705 | VR706 | VR701 VR703 | IC601 | VR601

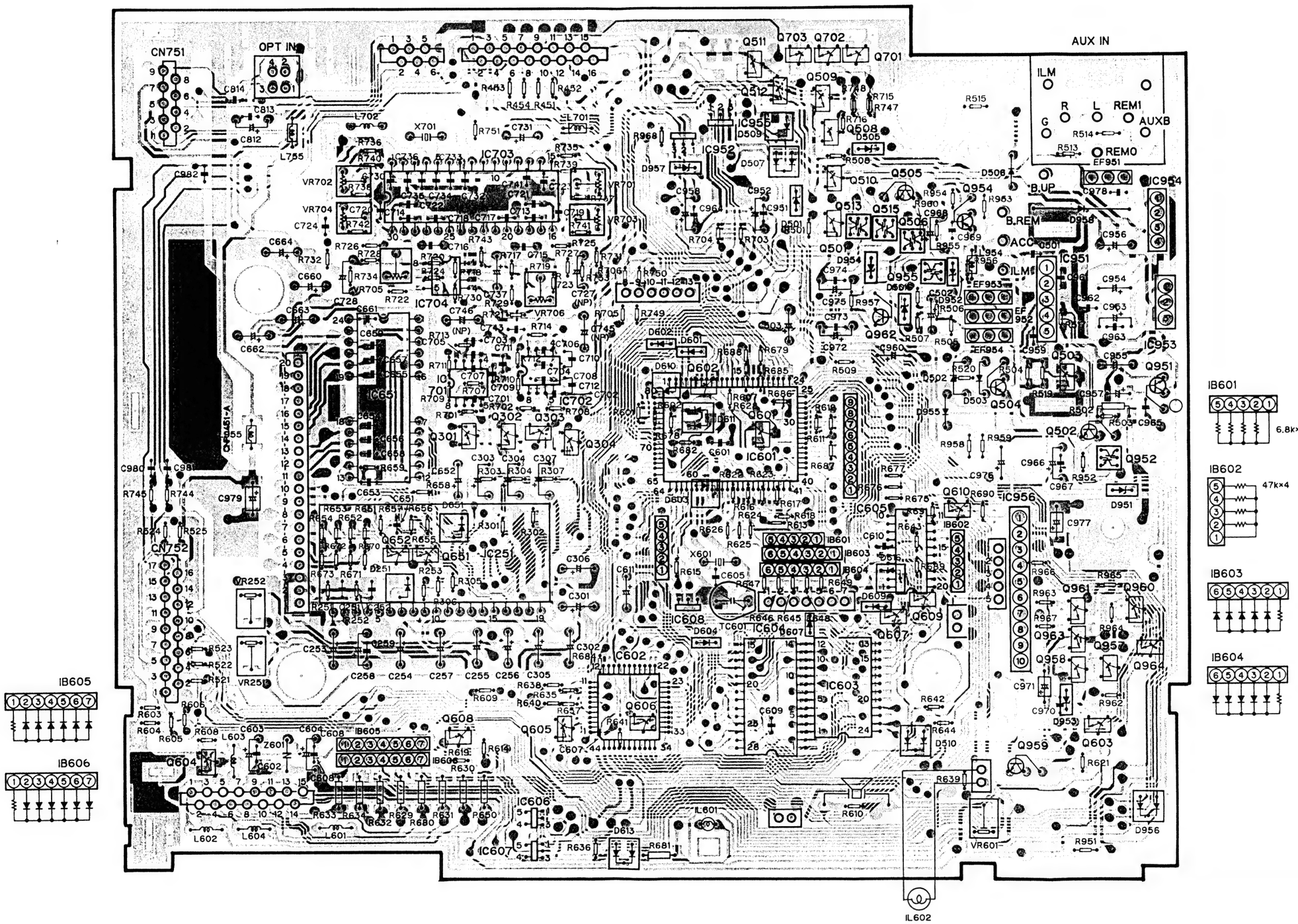

Fig. 2

4. SCHEMATIC CIRCUIT DIAGRAM

● **Audio P.C.Board**

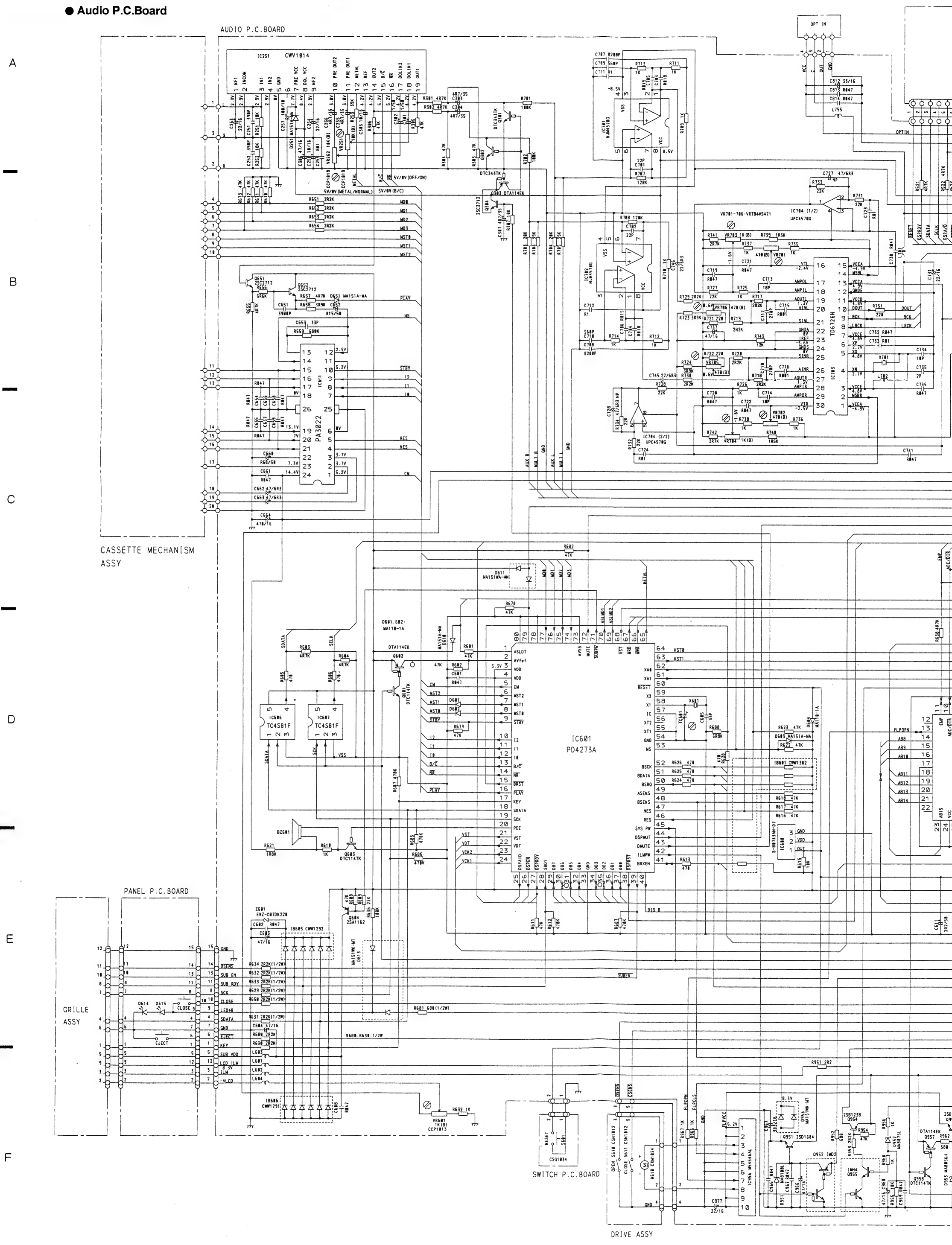

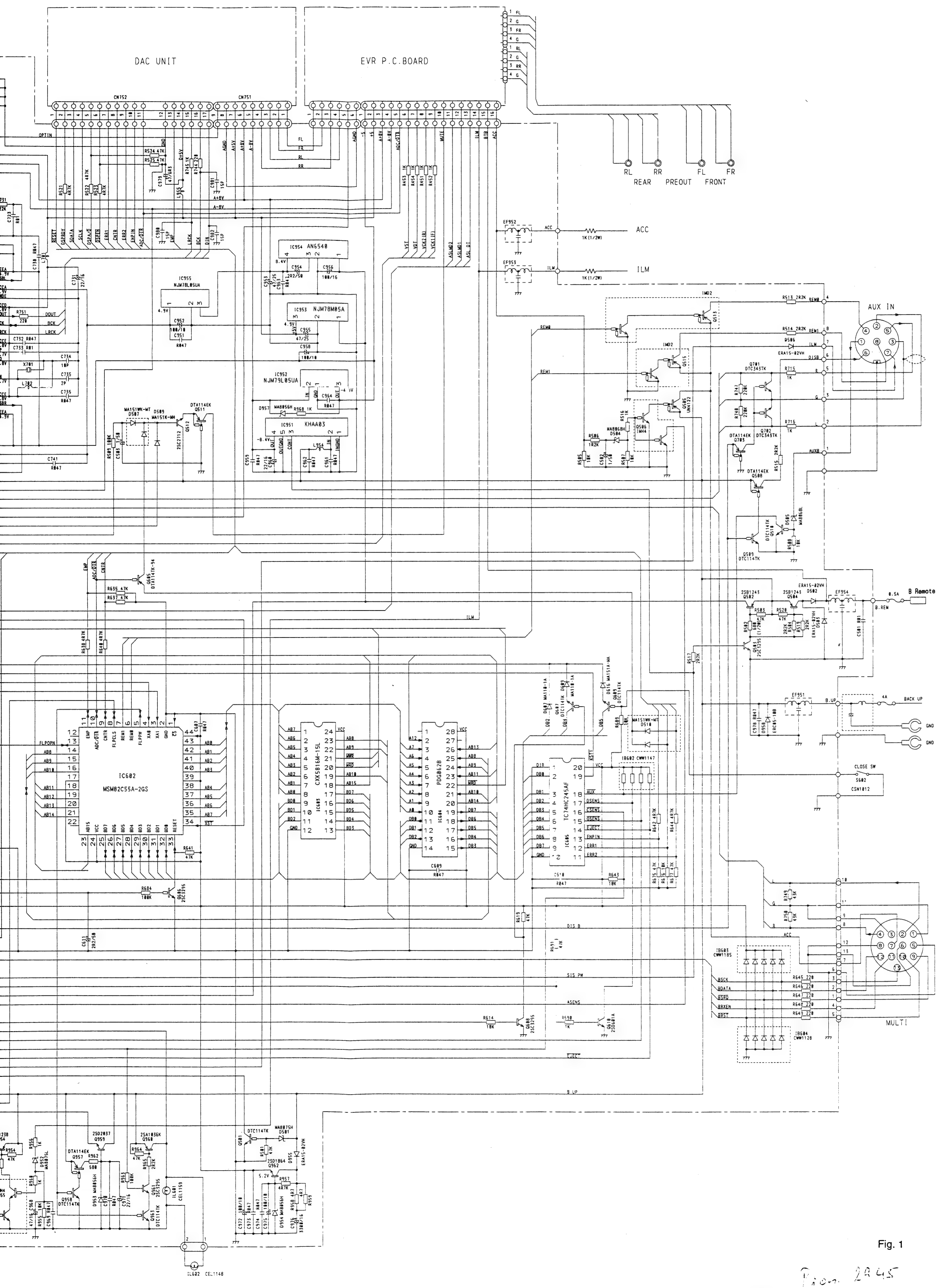

Fig. 1

Prom. 2845

3. ELECTRICAL PARTS LIST

(Page 71)

Audio Unit

			KEX-M900/US	KEX-M900RDS/EW	
Circuit Symbol & No.			Part No.	Part No.	Note
D	605	Chip Diode	MA110-1A	----	
D	607	Chip Diode	----	MA110-1A	
D	952	Chip Diode	----	MA8075L	
R	956		----	RS1/10S102J	
R	961		RS1/10S222J	----	

PIONEER

Service Manual

ORDER NO.
CRT-468-0

CASSETTE MECHANISM ASSEMBLY

CX-156/A, CX-156/B

- This service manual is for cassette mechanism assembly used in car stereo components.
- Refer to the service manual for individual models for details on sections other than the cassette mechanism assembly.

Model	Service Manual	Cassette Mechanism Assembly
FX-K5/EW	CRT-469	CX-156/A
FX-K5B/EW		CX-156/A
FX-K5SDK/WG		CX-156/A
FEX-55/US, CA, CS	CRT-471	CX-156/A
FEX-50/ES	CRT-470	CX-156/A
KX-E60/EW	CRT-476	CX-156/B

Model	Service Manual	Cassette Mechanism Assembly

CONTENTS

1. REPLACEMENT OF PARTS IN CASSETTE MECHANISM 1
2. MECHANISM DESCRIPTION 4
3. ADJUSTMENT 8
4. EXPLODED VIEW 10
5. CONNECTION DIAGRAM 13
6. SCHEMATIC CIRCUIT DIAGRAM 14
7. ELECTRICAL PARTS LIST 14

PIONEER ELECTRONIC CORPORATION 4-1, Meguro 1-Chome, Meguro-ku, Tokyo 153, Japan
PIONEER ELECTRONICS (USA) INC. P.O. Box 1760, Long Beach, California 90801 U.S.A.
TEL: (800) 421-1404, (800) 237-0424
PIONEER ELECTRONIC (EUROPE) N.V. Keetberglaan 1, 2740 Beveren, Belgium TEL: 03/775·28·08
PIONEER ELECTRONICS AUSTRALIA PTY. LTD. 178-184 Boundary Road, Braeside, Victoria 3195, Australia
TEL: (03) 580-9911

ES © DEC. 1984 Printed in Japan

1. REPLACEMENT OF PARTS IN CASSETTE MECHANISM

• Belt and capstan motor (M3) replacement

1. Remove the four screws and the cover. (Fig. 1)
2. The belt in Fig. 2 can be replaced. (Be sure that the belt is not greased and not twisted.)
3. To replace the capstan motor, remove the two screws shown in Fig. 2.

• Cassette holder removal

1. Turn the capstan motor until the cassette holder drops down. (Do not turn the flywheel directly by hand.)
2. Remove the screw labeled "B", the collar and the spring.
3. Remove unit "A" and the cassette holder "D" and "E".

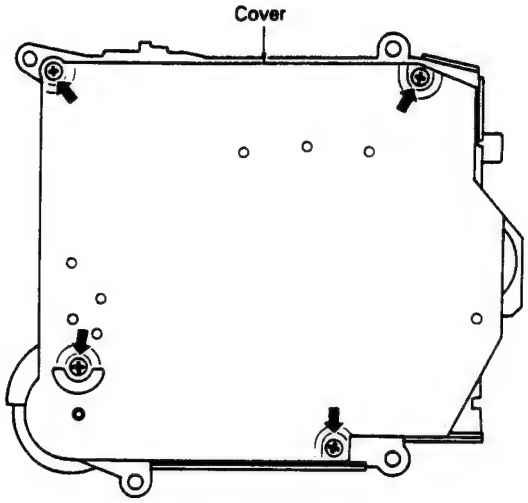

Fig. 1

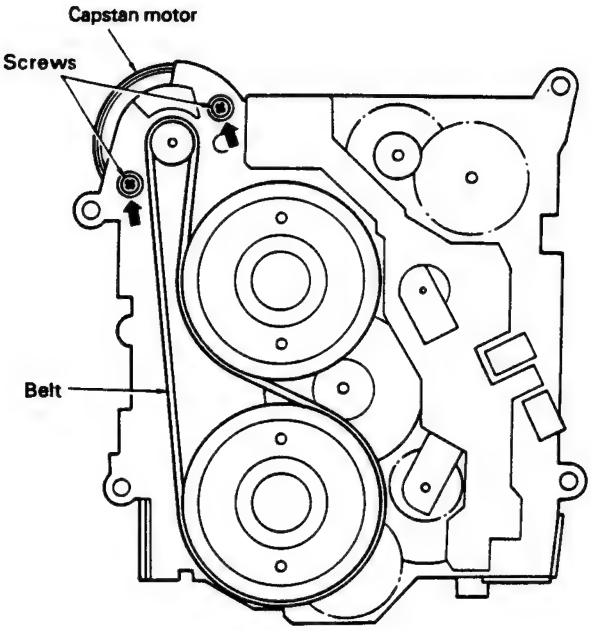

Fig. 2

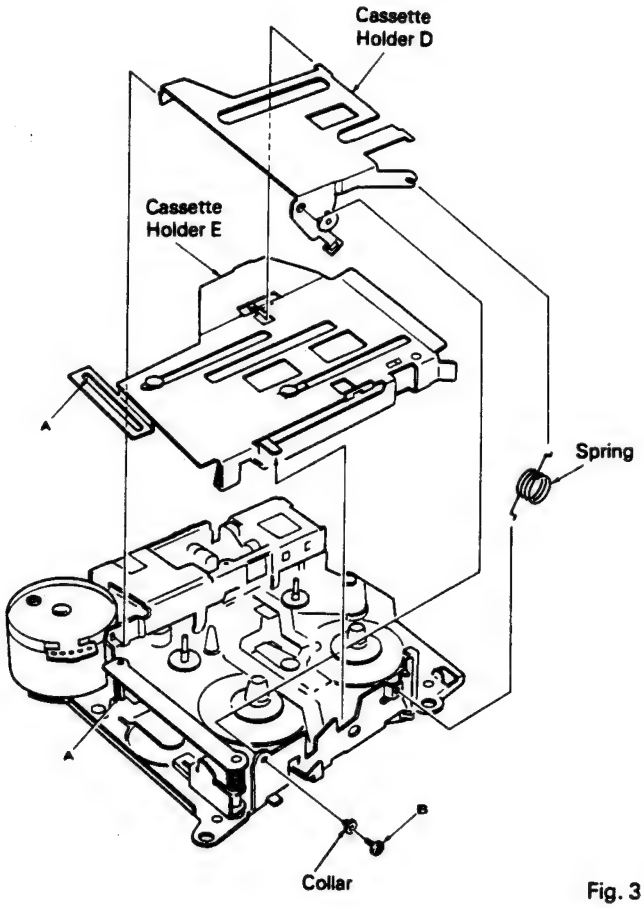

Fig. 3

• Head unit replacement

1. Remove the washer and spring.
2. Remove the screw labeled "F", and the head unit can be removed in the opposite direction.
3. Be careful of the following point during reassembly.
   - Put the head unit pins through the lever holes. (One in front and one in back.)

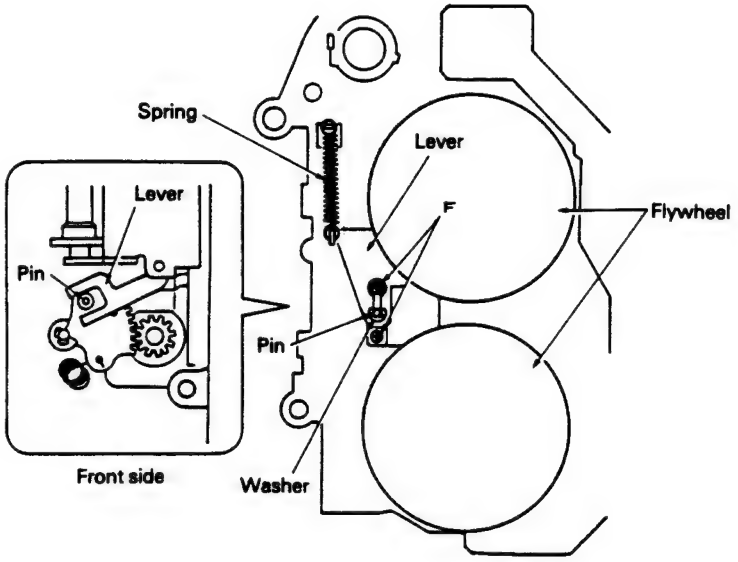

Fig. 4

• Sub-motor replacement (M1 and M2)

1. Remove the two screws labeled "G" and remove the P.C. board unit.
2. The sub-motor can be removed by removing the three screws indicated by the arrows.
3. Sub-motor 2 (for switching the FF/REW gear) can be replaced when the spacer has been removed. (The motor fits very snugly, so some force must be used to remove it.)
4. Sub-motor 1 (for turning and positioning the head) can be replaced by removing the belt, lock washer, pulley and two screws labeled "J".

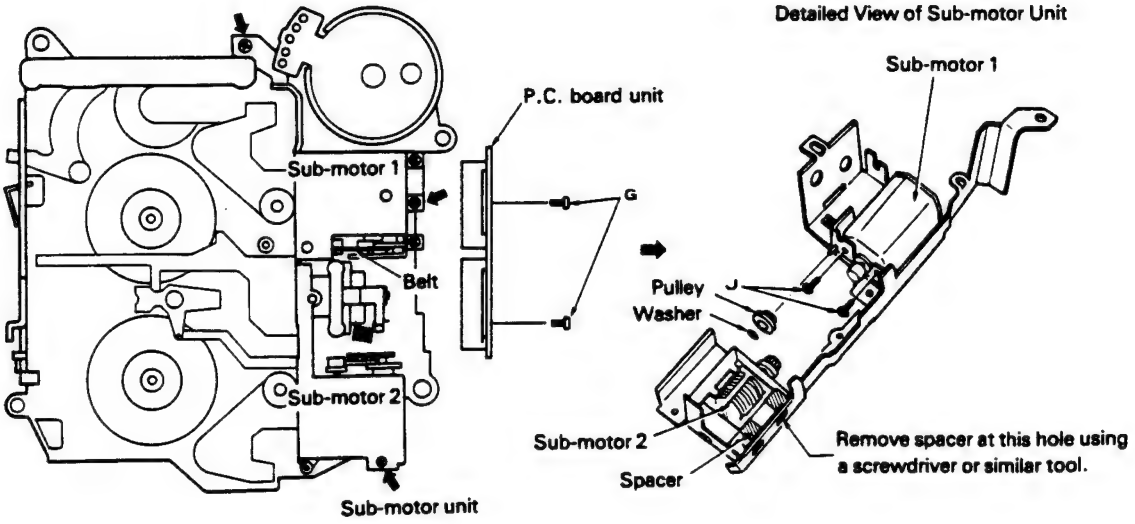

Fig. 5

• Reel unit replacement

1. Remove the six screws and the switch P.C. board.
2. Remove the screw labeled "K" and the collar and free the FF/REW idler gear.
3. The reel assy can be replaced by removing the two screws labeled "L" and removing the reel unit.

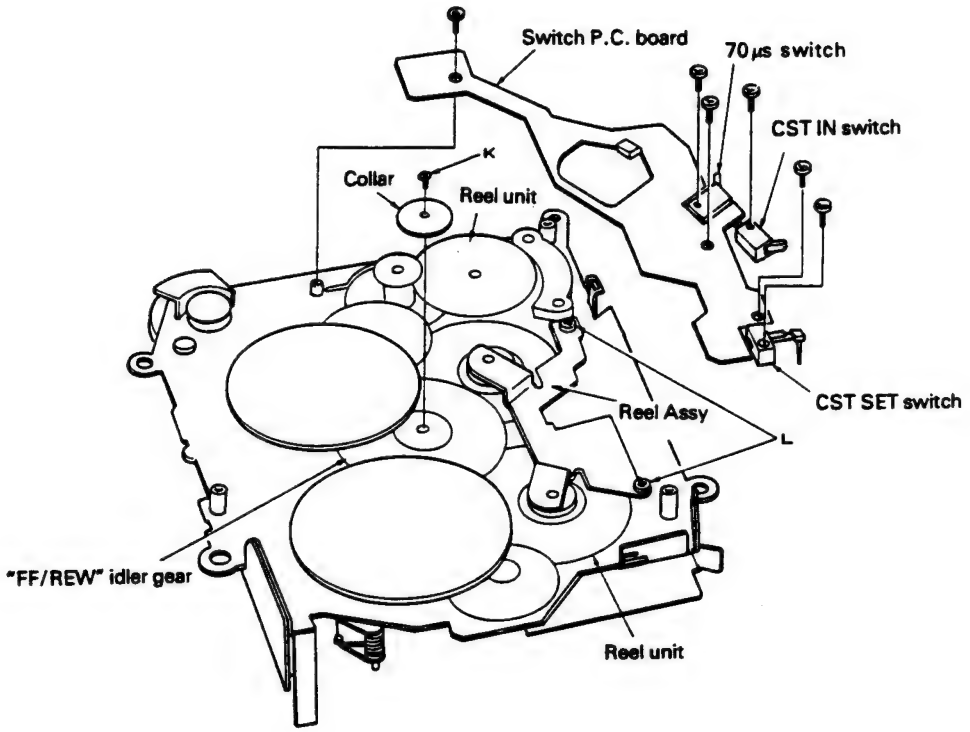

Fig. 6

2. MECHANISM DESCRIPTION

Cassette mechanism assy for CX-156/A is used in this mechanism description.

1. Outline of Mechanism

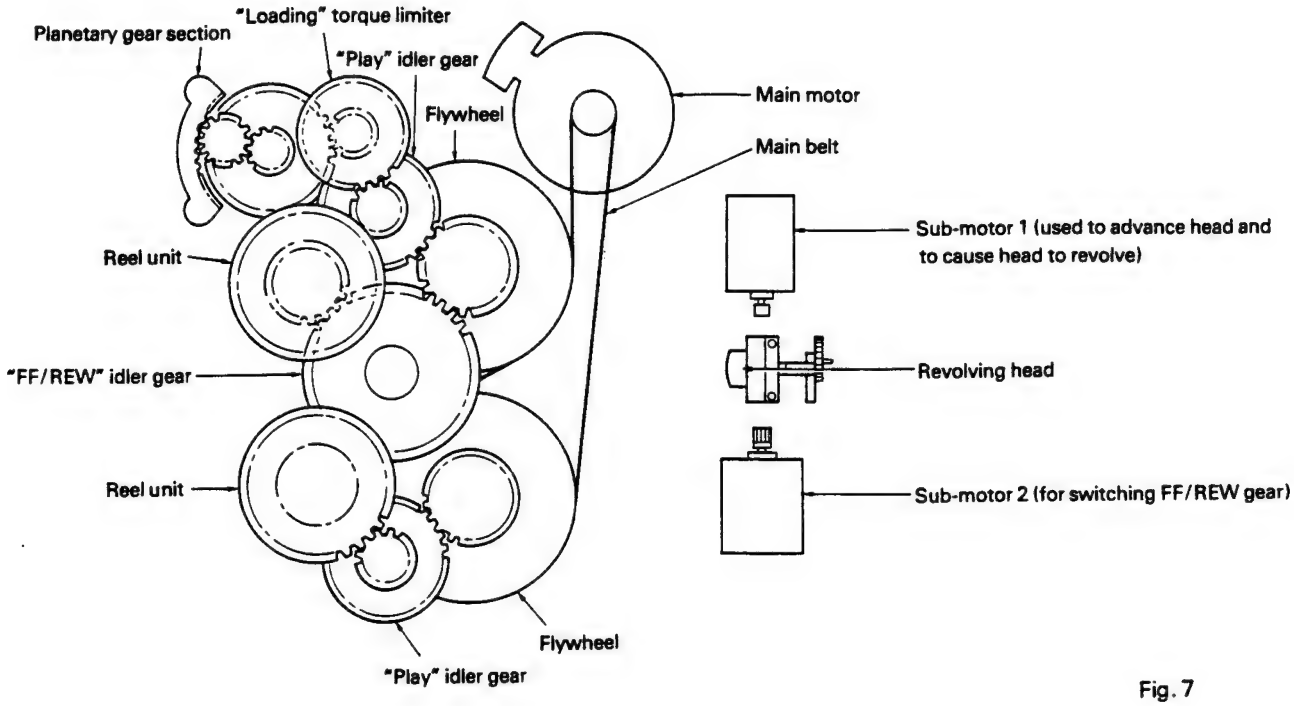

Fig. 7

2. Loading/Eject Function

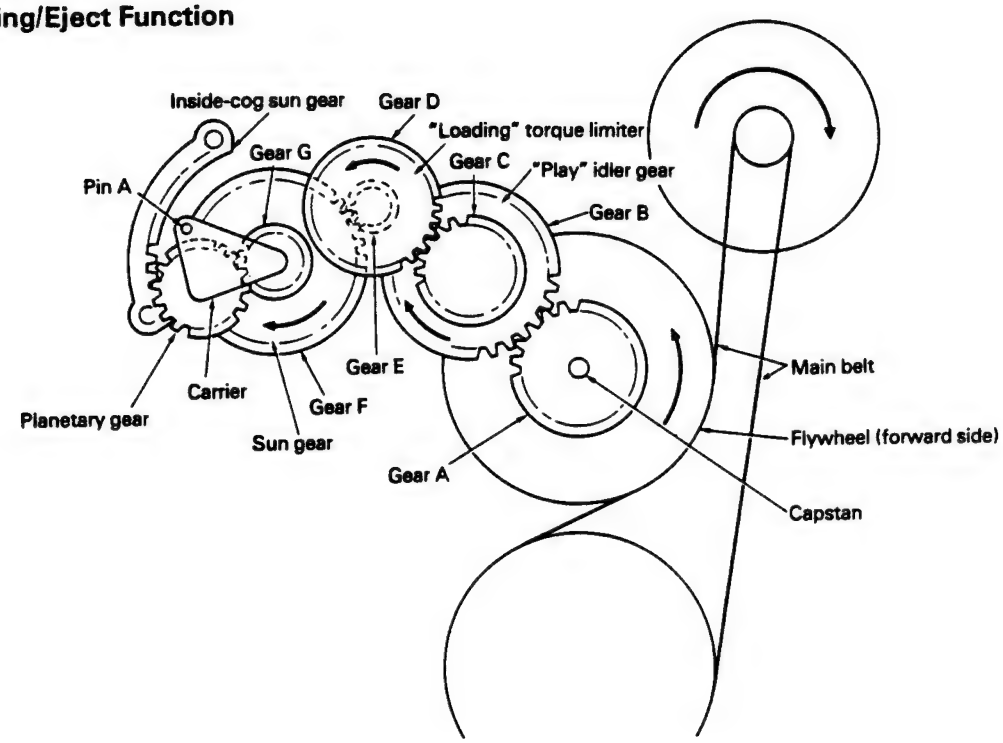

Fig. 8

3. Cassette Tape Load and Eject Mechanism

• Cassette tape loading operation

1. Push the cassette tape lightly in the direction indicated by the arrow. (As shown in Fig. 10, arm "A" and arm "B" connect to spring "A". These are also connected to common axis shaft "A", which is attached to the chassis surface and acts as a swivel. Pin "A", which is caulked to the planetary gear unit carrier, goes through the chassis and fits into the oblong hole of arm "B". Because pin "A" won't move as long as the capstan motor isn't moving, arm "B" won't move either.)
2. When a cassette tape is loaded, arm "A" moves in the direction indicated by the arrow and spring "A" loosens. Lever "A" also moves in the direction indicated by the arrow, and the catch at left of the lever releases arm "C". Arm "C" then turns counterclockwise and opens the CST IN switch. The capstan motor then begins turning forward.
3. The carrier then moves clockwise because the planetary gear moves along the inside-cog sun gear. Pin "A" which is caulked to the carrier also moves in the same direction. (Fig. 11) The movement of pin "A" is causing arm "B" to move counterclockwise. Arm "A" turns in the same fashion and the "A'" unit of lever "A" draws the cassette tape in. (Fig. 9)

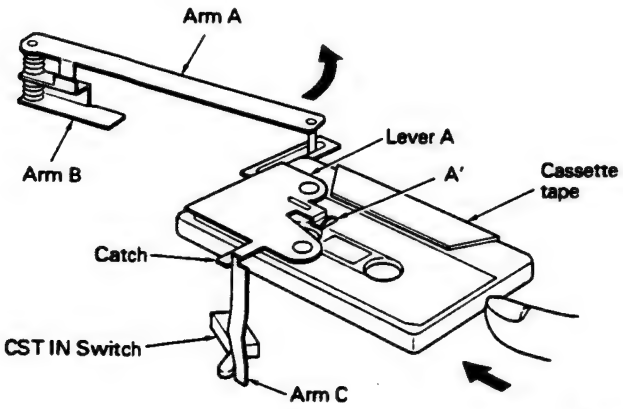

Fig. 9

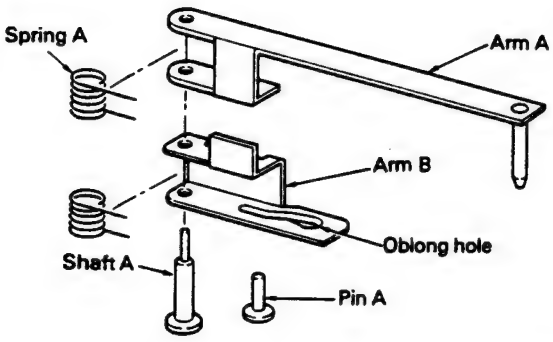

Fig. 10

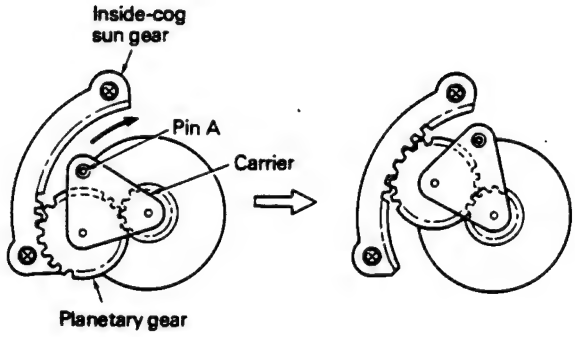

Fig. 11

4. The oblong hole of arm "B" is as shown in Fig. 12. The cassette tape draw-in process will be complete when the pin "A" degree of rotation is θ. Arm "B" will not move while the degree of rotation is θ'.

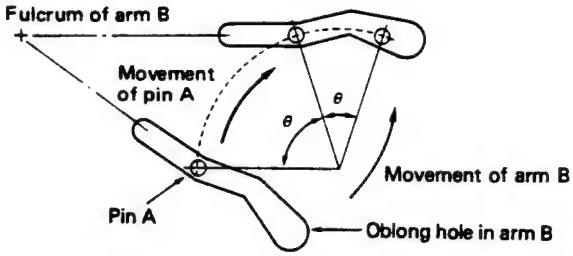

Fig. 12

5. As shown in Fig. 13, arm "C" (caulked to the chassis swivel) is fixed to pin "A" and when the degree of rotation is θ arm "C" is stationary, and when it is θ' arm "C" turns clockwise.

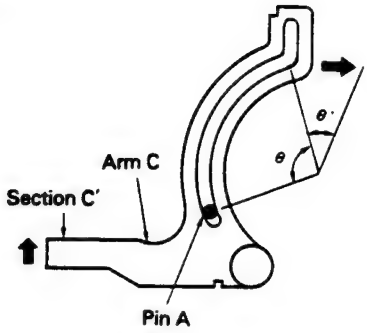

Fig. 13

6. As shown in Fig. 14, the "C'" unit of arm "C" connects to the cassette arm (which suspends the cassette tape) through spring "C". The arm "C" movement described above in paragraph five makes the "C'" unit move in the direction indicated by the arrow in Fig. 14. The cassette arm pushes down holder "A" by means of spring "B". The "C'" unit is released when holder "A" drops down.
7. In order for the capstan motor to keep turning forward, the planetary gear disengages from the inside-cog sun gear and becomes free.

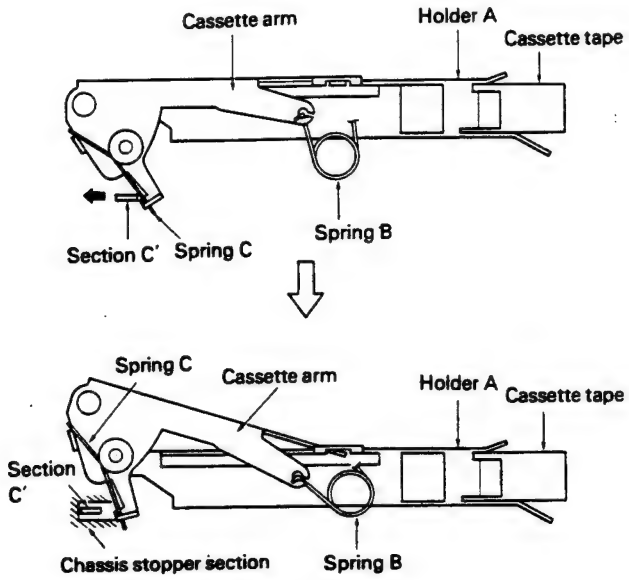

Fig. 14

• Eject operation

1. Turning on the eject switch reverses the capstan motor. As shown in Fig. 15, spring "D" places slight friction on the planetary gear which causes it to engage with the inside-cog sun gear. The cassette tape is ejected following an operation opposite to the loading operation.

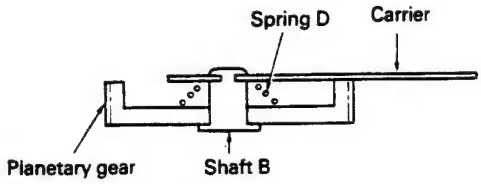

Fig. 15

4. Head Turning and Head Positioning Operations (during forward play)

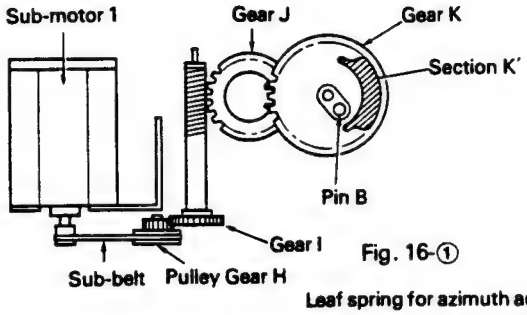

Fig. 16-①

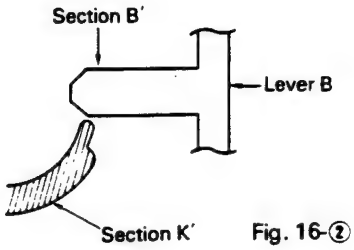

Fig. 16-②

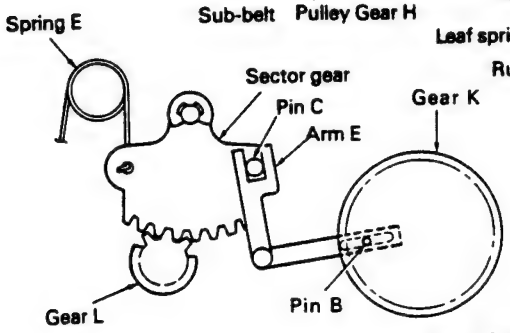

Fig. 16-③

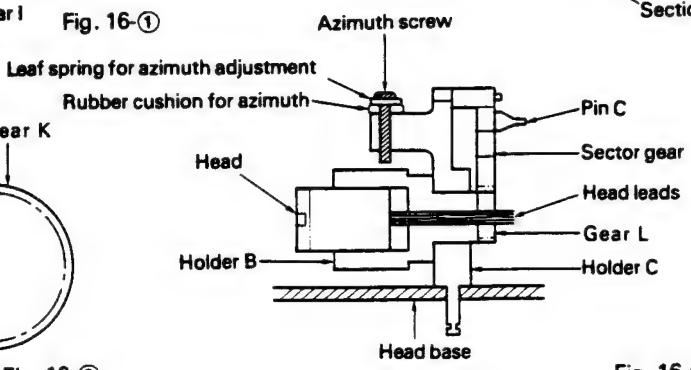

Fig. 16-④

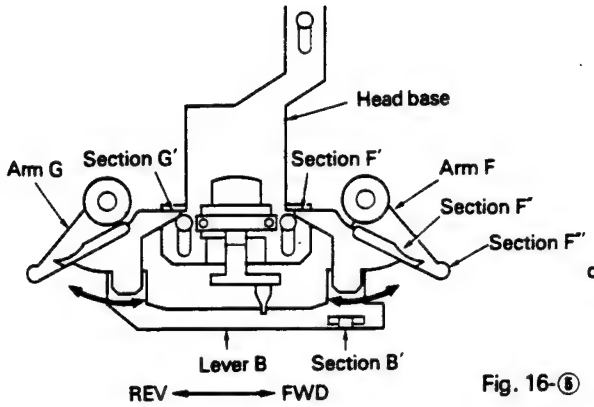

Fig. 16-⑤

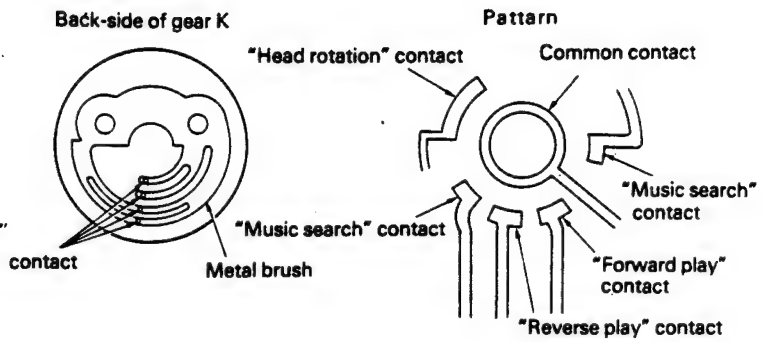

Fig. 16-⑥

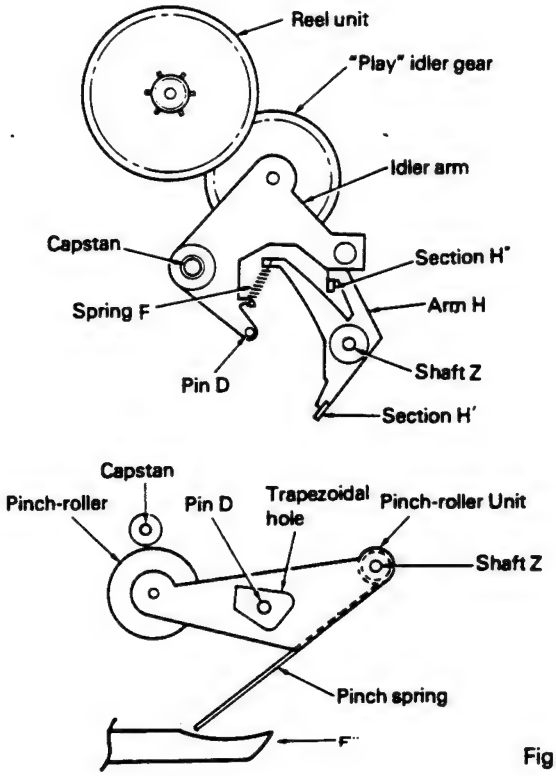

Fig. 17

1. The sub-belt from sub-motor 1 goes through pulley gear "H", gear "I", gear "J" and turns gear "K". Head turning and head base positioning take place using the "K'" unit (the projecting unit) of gear "K" and pin "B". There is a metal brush attached to the back of gear "K" which detects the passing through of all patterns and common patterns and stops sub-motor 1. This controls the head positioning, the head turning, the contact pressure of the play idler gear and the contact pressure of the pinch roller.
2. Head turning at pin "B" takes place until gear "K" starts turning which brings the "K'" part into contact with the lever "B", "B'" part. (Fig. 16-③)
3. Pin "B" engages with the arm "E" oval opening and rotates arm "E". The arm "E" sector gear is engaged with pin "C" and this turns the head. The head rotation pattern (Fig. 16-⑥) performs this operation inside a certain angle.
4. When gear "K" turns it also pushes the lever "B", "B'" part. The "B'" part turns arm "F" and arm "G" counter-clockwise and advances head base with the arm "G", "G'" part. (Fig. 16-②, ⑤)
5. After the head base goes beyond the MS pattern (Fig. 16-⑥) position, the arm "F", "F'" part pushes the pinch roller unit pinch spring and presses the pinch roller down onto the capstan. (Fig. 17)
6. Simultaneously, the arm "F", "F" unit pushes the arm "H", "H" part. The "H'" part lock releases when pushed, and the play idler gear comes into contact with the reel unit. Play operation begins because of this. (Fig. 16-⑤, Fig. 17)
7. When going from play to eject, first, the pinch roller disengages from the capstan, and then using the pinch roller unit trapezoidal hole, releases the idler arm from the reel unit by means of pin "D". After that, the "H'" unit again meshes with the idler arm and the "play" idler gear stops after completely disengaging from the reel unit.

5. FF/REW Operation

1. As with the head operations a brush is attached to the back of gear "P" and using patterns and the brush, position sensing takes place and this controls the FF/REW operation.
2. Sub-motor 2 goes through gears "L", "M" and "N" and turns gear "P". When gear "P" turns, arm "I" rotates by means of arm "J". Arm "I" rotates the FF/REW idler gear and engages it with the reel unit.

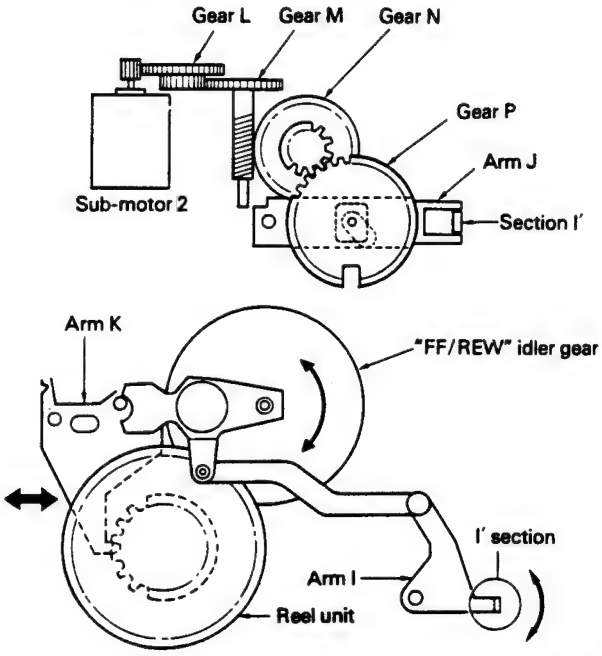

Fig. 18

3. ADJUSTMENT

3.1 AZIMUTH ADJUSTMENT

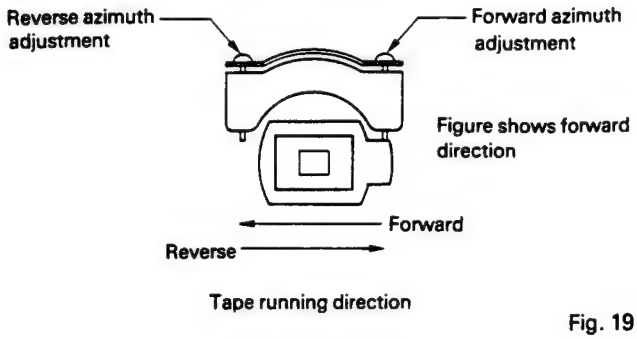

Fig. 19

• To Adjust

1. Play "A" side of STD-341A (10kHz, −20dB). Adjust each screw for maximum output in forward and reverse directions.
2. Play "B" side in forward and reverse directions to confirm adjustment.

3.2 TAPE SPEED ADJUSTMENT

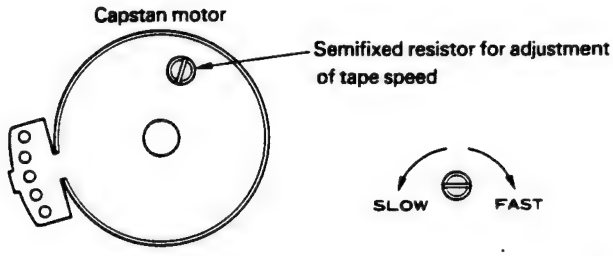

Fig. 20

• To Adjust

1. Reproduce STD-301 (3kHz, −10dB). Adjust the semifixed resistor so that the frequency counter shows 3,010Hz (+30Hz, −30Hz).

3.3 CHECK POINTS OF CASSETTE MECHANISM

Confirm the following items when replacing parts of the cassette mechanism.	■ Tape speed deviation: 3,000 $^{+90}_{-30}$ Hz (4.76 cm/s $^{+3}_{-1}$%) Using an STD-301, measure the speed at the start and end of winding and see that a deviation remains within the limits each time. If values indicated by the pointer vary considerably, adjust to 70% of the minimum and maximum values. Measuring time shall be 5~6 seconds.-	■ Wow and flutter: Less than 0.15% (WMS) Using an STD-301, measure the wow and flutter at the start and end of winding and take the maximum value. If values indicated by the pointer vary considerably, adjust to 70% of the minimum and maximum values. Measuring time shall be 5 ~ 6 seconds.
■ Fast forward and rewinding time: 95 ~ 115 seconds Using a C-60, set to fast forward and rewind, and measure the time with a stop watch.	■ Winding torque: 40 ~ 60g • cm 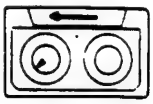 Using a cassette type torque meter (100 g·cm), measure the minimum value while in the play mode. Measuring time shall be 5 ~ 6 seconds.	■ F.F. torque: 70~ 110g • cm Using a cassette type torque meter (120 g·cm), measure the value when the tape stops in the F.F. mode.
■ REW torque: 70~ 110g • cm 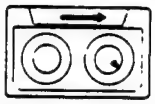 Using a cassette type torque meter (120 g·cm), measure the value when the tape stops in the REW mode.	■ Back tension torque: 2.0~3.5g • cm 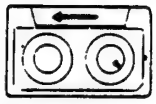 After setting in the REW mode without loading a cassette tape for 5 minutes, measure the back tension torque in the play mode, using a cassette type torque meter.	■ Cassette loading force: 450 ~ 550 g Push the center of the cassette and measure the force with a tension meter (1 kg).

4.EXPLODED VIEW

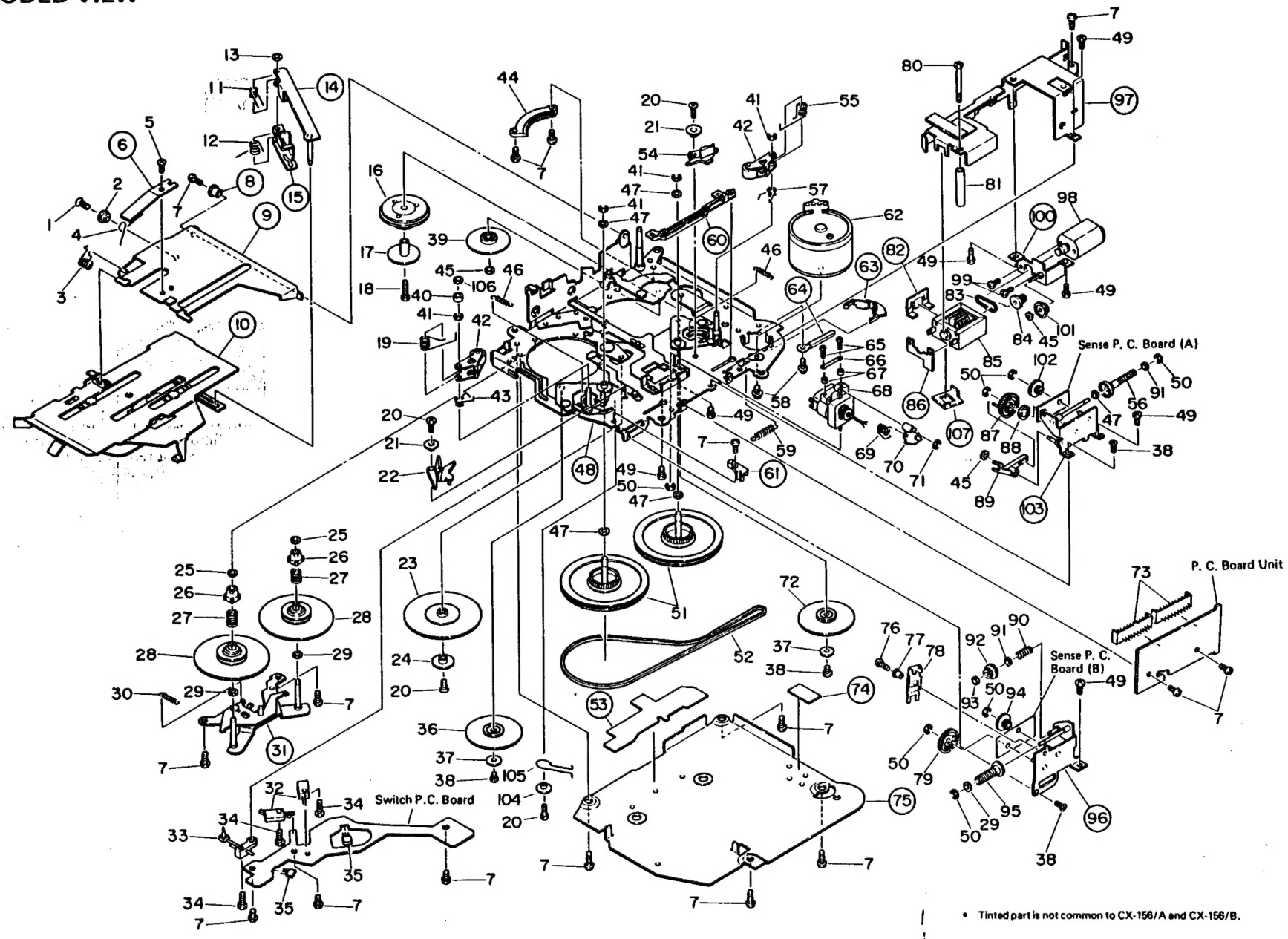

• Tinted part is not common to CX-156/A and CX-156/B.

Fig. 21

NOTE:

- *For your Parts Stock Control, the fast moving items are indicated with the marks ★★ and ★.*
  ★★: GENERALLY MOVES FASTER THAN ★.
  This classification shall be adjusted by each distributor because it depends on model number, temperature, humidity, etc.
- *Parts whose parts numbers are omitted are subject to being not supplied.*

Mark	No.	Part No.	Description
	1.	HBA-193	Screw M1.4×3.5
	2.	CLB-691	Collar
	3.	CBH-837	Spring
	4.	CBH-867	Spring
	5.	HBA-147	Screw M1.4×1.4
	6.		Spring
	7.	BMZ20P040FMC	Screw
	8.		Bush
	9.		Arm
	10.		Holder Unit (CX-156/A)
			Holder Unit (CX-156/B)
	11.	CBH-836	Spring (CX-156/A)
		CBH-887	Spring (CX-156/B)
	12.	CBH-886	Spring
	13.	CBF-046	Washer
	14.		Arm Unit
	15.		Arm
	16.	CXD-388	Gear Unit
	17.	CLB-617	Collar
	18.	CBA-166	Screw M1.7×8
	19.	CBH-832	Spring
	20.	HBA-310	Screw M2×3.5
	21.	CLB-612	Collar
	22.	CNW-930	Arm
	23.	CNW-944	Gear
	24.	CLB-616	Collar
	25.	CBF-135	Washer
	26.	CNW-932	Collar
	27.	CBH-827	Spring
★★	28.	CXD-384	Reel Unit
	29.	CBF-088	Washer
	30.	CBH-868	Spring
	31.		Bracket Unit
★★	32.	CSN-091	Switch (70μs, CST IN)
★★	33.	CSN-089	Switch (CST SET)
	34.	CBA-172	Screw M1.7×5.5
★	35.	SDME106A	Magnetic Resistive Device
	36.	CNW-943	Gear
	37.	CLB-615	Collar
	38.	HBA-209	Screw M2×2
	39.	CNW-950	Gear
	40.	CLB-690	Roller
	41.	EBG-001	Washer
★★	42.	CXD-387	Pinch Roller Unit
	43.	CBH-834	Spring
	44.	CNW-951	Gear
	45.	CBF-126	Washer
	46.	CBH-835	Spring
	47.	HBF-179	Washer
	48.		Chassis Unit (CX-156/A)
			Chassis Unit (CX-156/B)
	49.	HBA-175	Screw M2×2.5
	50.	YE12FUC	Washer
	51.	CNW-942	Flywheel
★★	52.	CNT-111	Belt
	53.		Insulator
	54.	CNW-931	Arm
	55.	CBH-831	Spring
	56.	CNW-956	Gear
	57.	CBH-833	Spring
	58.	PMS26P030FMC	Screw
	59.	CBH-830	Spring
	60.		Lever
	61.		Spacer
★★	62.	CXM-161	Motor (Capstan)
	63.		Clamper
	64.		Clamper
	65.	CBA-173	Screw M1.4×8
	66.	CBE-114	Spring
	67.	CNY-134	Azimuth Rubber
★★	68.	CXD-758	Head Unit
	69.	CBH-829	Spring
	70.	CNW-939	Gear
	71.	YE15FUC	Washer
	72.	CNW-943	Gear
	73.	CKS-534	Plug
	74.		Insulator
	75.		Cover
	76.	HBA-158	Screw M1.4×5
	77.	CLB-750	Collar
	78.	CNH-004	Arm
	79.	CNW-953	Gear
	80.	CBA-165	Screw M2
	81.	CLB-749	Spacer
	82.		Spacer
★★	83.	CNT-114	Belt
	84.	CNW-941	Gear
★★	85.	CXM-351	Motor (Gear Position)
	86.		P.C. Board
	87.	CNW-952	Gear
	88.	CNN-481	Spacer
	89.	CNW-958	Arm
	90.	CBH-866	Spring
	91.	HBF-116	Washer
	92.	CNW-954	Gear
	93.	CBF-135	Washer
	94.	CNY-077	Gear
	95.	CNY-148	Gear
	96.		Holder Unit
	97.		Guide
★★	98.	CXM-452	Motor (Head Position)
	99.	HBA-244	Screw M1.4×1.6
	100.		Bracket Unit
	101.	CNY-075	Pulley
	102.	CNW-955	Gear
	103.		Holder Unit
	104.	CLB-760	Collar
	105.	CBH-893	Spring
	106.	HBF-180	Washer
	107.		Cover

5. CONNECTION DIAGRAM

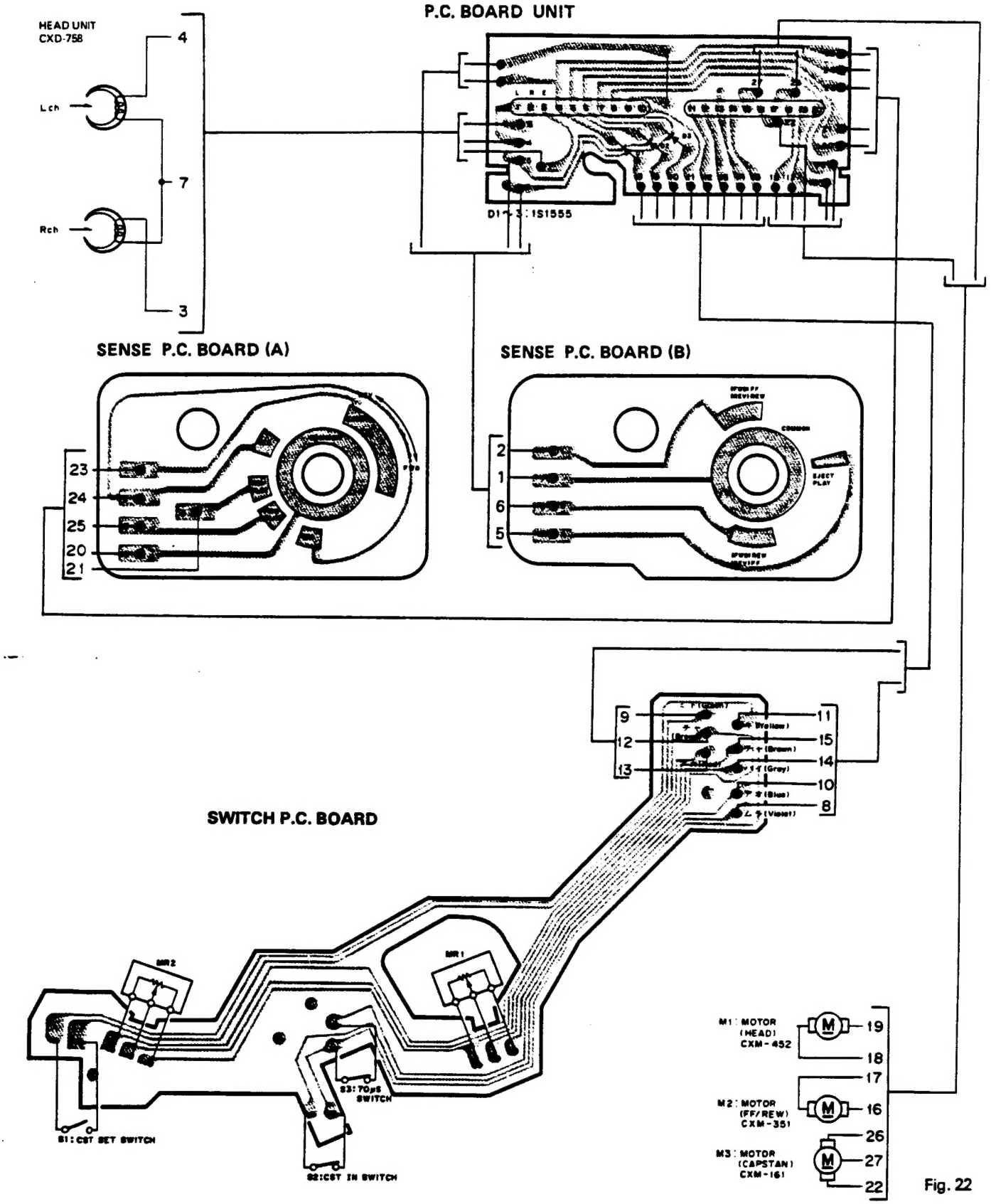

Fig. 22

6. SCHEMATIC CIRCUIT DIAGRAM

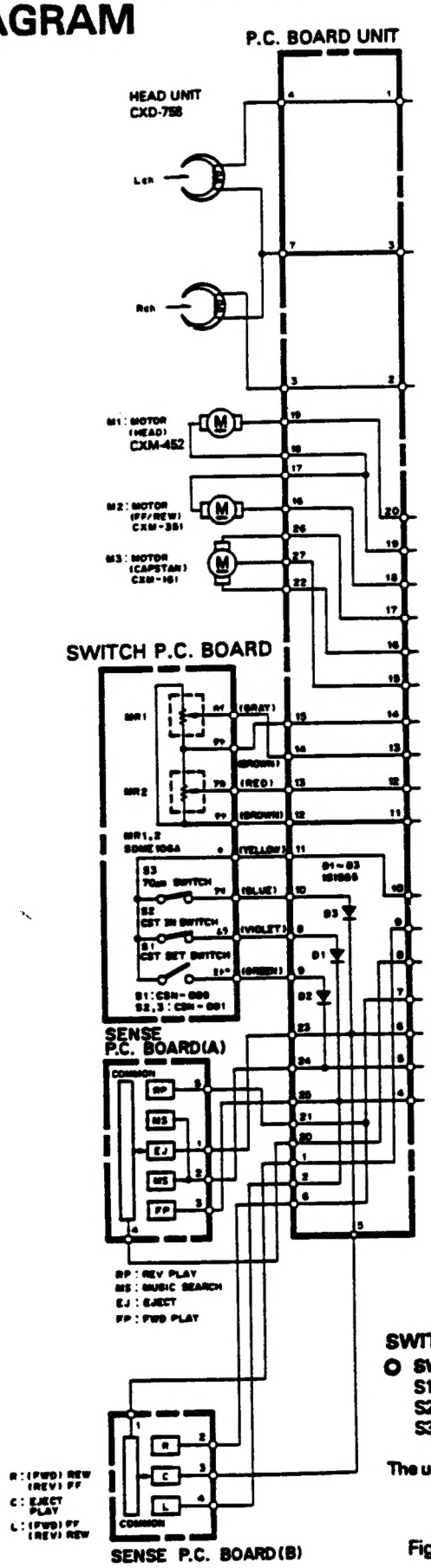

SWITCHES

O SWITCH P.C. BOARD

S1: CST SET SWITCH.....ON–OFF
S2: CST IN SWITCH.....ON–OFF
S3: 70μs SWITCH.....ON (120μs)–OFF (70μs)

The underlined indicates the switch position.

Fig. 23

7. ELECTRICAL PARTS LIST

Switch P.C. Board

Mark	Symbol & Description		Part No.
★★	S1	Switch (CST SET)	CSN-089
★★	S2, S3	Switch (CST IN, 70μs)	CSN-091
★	MR1, MR2	Magnetic Resistive Device	SDME106A

P.C. Board Unit

Mark	Symbol & Description	Part No.
★	D1 – D3	1S1555

Miscellaneous Parts List

Mark	Symbol & Description		Part No.
★★	Head Unit		CXD-758
★★	M1	Motor (Head)	CXM-452
★★	M2	Motor (Gear)	CXM-351
★★	M3	Motor (Capstan)	CXM-161